NSS-D

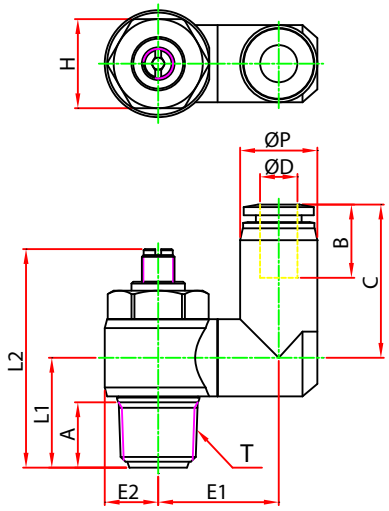

MODEL	ØD	ØP	T	L1	L2		E1	E2	A	B	H (Hex)	C	WEIGHT (g)	BOX(EA)
					MIN	MAX								
NSS 04-M5(D)	4	10.5	M5*0.8p	9.6	20.4	22.9	12.3	5.2	3.6	14.8	8	20.3	9.2	50
NSS 04-01(D)			R 1/8	15.1	26.7	31.2	14.3	7.0	8.2		11	20.3	19.4	50
NSS 04-02(D)			R 1/4	18.4	31.3	37.4	17.8	9.2	11.0		15	20.3	36.1	50
NSS 06-M5(D)	6	12.5	M5*0.8p	9.6	20.4	22.9	13.3	5.2	3.6	16.4	8	22.4	10.2	50
NSS 06-01(D)			R 1/8	15.6	26.7	31.2	15.0	7.0	8.2		11	24.0	21.1	25
NSS 06-02(D)			R 1/4	18.4	31.3	37.4	20.3	9.2	11.0		15	25.9	38.7	25
NSS 06-03(D)			R 3/8	21.9	37.0	42.9	23.3	11.5	12.2		19	25.9	70.2	25
NSS 08-01(D)	8	14.8	R 1/8	15.6	26.7	31.2	16.2	7.0	8.2	18.3	11	24.9	22.1	25
NSS 08-02(D)			R 1/4	18.4	31.3	37.4	19.3	9.2	11.0		15	28.3	39.8	25
NSS 08-03(D)			R 3/8	22.4	37.0	42.9	24.6	11.5	12.2		19	29.3	71.4	25
NSS 08-04(D)			R 1/2	26.6	43.0	49.3	26.6	14.3	16.5		24	29.3	110.0	20
NSS 10-02(D)	10	17.5	R 1/4	18.4	31.3	37.4	20.3	9.2	11.0	20.2	15	30.7	42.2	20
NSS 10-03(D)			R 3/8	22.4	37.0	42.9	24.6	11.5	12.2		19	31.7	73.5	20
NSS 10-04(D)			R 1/2	26.7	43.0	49.3	26.7	14.3	16.5		24	33.1	112.5	12
NSS 12-02(D)	12	20.5	R 1/4	18.4	31.3	37.4	21.8	9.2	11.0	22.9	15	33.4	44.1	12
NSS 12-03(D)			R 3/8	22.4	37.0	42.9	24.6	11.5	12.2		19	34.4	79.0	12
NSS 12-04(D)			R 1/2	26.7	43.0	49.3	26.7	14.3	16.5		24	35.8	115.9	12