NUT

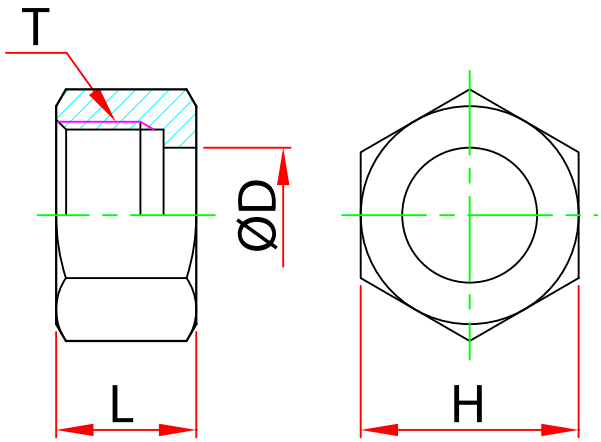

MODEL	ØD	L	T	H (Hex)	WEIGHT (g)	BOX(EA)
NUT 04	4	9.0	M8*0.75p	10	3.0	100
NUT 06	6	9.0	M10*1.0p	12	5.0	100
NUT 08	8	9.0	M12*1.0p	14	6.0	100
NUT 10	10	10.0	M15*1.0p	17	9.0	100
NUT 12	12	11.0	M17*1.0p	19	10.0	100
NUT 16	16	13.0	M22*1.0p	27	32.0	50