On-off/soft-start valves MS-EM/EE/DL/DE, MS series

★	Festo Core Range Solves the majority of your automation tasks	With the Festo Core Range, we have selected the most important products and functions from our broad product catalogue, and added the quickest delivery.
Worldwide:	Quickest delivery – wherever, whenever	The Core Range offers you the best value for your automation tasks.
Simply good:	Expected high Festo quality	
Fast:	Easy and fast to select	

Just look for the star!

Key features

Service unit components of the MS series

Solutions for every application

With its large product range, highly effective components and a wide choice of functions, the MS series from Festo offers a complete concept for compressed air preparation. It is suitable for simple standard applications as well as application-specific solutions with very high quality requirements. Available as individual components, pre-assembled combinations ex-stock, application-specific combinations or complete turnkey solutions. The five sizes in the MS series achieve maximum flow rates with low space requirements.

Freely combinable function modules

Pressure regulators, on/off and soft-start valves with safety function, filters, pressure and flow sensors, dryers, sensors and lubricators can be assembled into a suitable solution for every task. With the modular structure the components can be combined as required. The simple connection system saves time because the entire combination doesn't need to be disassembled when replacing individual modules.
Many of the components are also UL and ATEX certified.

CAD models and configurator

Convenient tools for planning and selecting application-specific individual devices and combinations. The product configurator lets you configure customised solutions quickly and transfer the order data without any hassle.

Engineering tools

Selection tool for choosing the right combination of service unit components without oversizing, and with the right air purity class:
→ **www.festo.com/engineering/service unit**

Integrated sensors

Pressure and flow sensors

- Maximum machine availability thanks to controlled processes
- Reliable compressed air preparation and supply for systems
- Integrated or stand-alone
- Easy to connect with M8/M12 plug

Safety functions

Soft-start/quick exhaust valves MS6-SV/MS9-SV

- Fast and reliable exhausting of systems up to Performance Level e, certified to EN ISO 13849-1
- Integrated soft-start function

Saving energy

Service unit combinations MSE6

- Fully automatic monitoring and regulation of the compressed air supply
- Automatic shut-off of the compressed air in stand-by mode
- Detection and notification of leakages
- Condition monitoring of relevant process data

Intelligent mix of sizes

- Optimum flow rate with a size that is up to 18% smaller
- Excellent energy efficiency
- Cost-optimised combinations – save up to 30%!

Size differences

Size		MS2	MS4	MS6	MS9	MS12
Grid dimension	[mm]	25	40	62	90	124
Connection sizes		M5, QS-6	G1/8, G1/4, G3/8	G1/4, G3/8, G1/2, G3/4	G1/2, G3/4, G1, G1 1/4, G1 1/2	G1, G1 1/4, G1 1/2, G2
Standard nominal flow rate qnN[1)]	[l/min]	350	1800	6500	20000	22000

1) Using pressure regulator MS-LR as an example

Key features

Note

Information

The next few pages provide a brief overview of the product range for the MS series service unit components.

You can find detailed information and all the technical data in the documentation for the relevant service unit component.

Accessories such as connecting plates or mounting brackets can be ordered either via the configurator or separately.

Design of a service unit combination

The sequence of the individual components within a service unit combination is relevant for safety and functionality. The service unit components cannot be combined in any order in the flow direction. There are restrictions and rules.

The configurator for the service unit MSB is a reliable and convenient way of arranging individual service unit components and ensures compliance with the applicable rules. As a result, you get a fully assembled unit, including UL or ATEX certification, if necessary.
When combining a unit from individually configured and ordered service unit components, the points on the right must be adhered to under all circumstances.

- Regulators MS-LFR/LR/LRP are only permissible in the flow direction with the same or decreasing pressure regulation range
- Filters MS-LFR/LF/LFM/LFX are only permissible in the flow direction with an increasing grade of filtration
- Lubricators MS-LOE are not permitted in the flow direction upstream of a filter MS-LFR/LFM/LF/LFX, water separator MS-LWS or membrane air dryer MS-LDM1
- A micro filter MS-LFM must be installed in the flow direction upstream of an activated carbon filter MS-LFX or membrane air dryer MS-LDM1
- A flow sensor SFAM cannot be installed directly downstream of a regulator MS-LFR/LR; a branching module MS-FRM must be positioned between them
- A soft-start/quick exhaust valve MS-SV must be the last service unit component in the flow direction

Product range for service unit components of the MS series

Type	Description	Size	Pneumatic connection					
			Push-in connector	Female thread			Connecting plate with thread	
				M	G	NPT	G	NPT
Combinations								
Service unit combinations MSB-FRC								Datasheets ➔ Internet: msb
	Combinations of filter regulator and lubricator	4	–	–	1/8, 1/4	–	–	–
		6	–	–	1/4, 3/8, 1/2	–	–	–
Service unit combinations MSB								Datasheets ➔ Internet: msb
	7 combinations, predefined	4	–	–	1/4	–	–	–
		6	–	–	1/2	–	–	–
	Freely configurable combinations	4	–	–	1/8, 1/4	–	1/8, 1/4, 3/8	1/8, 1/4, 3/8
		6	–	–	1/4, 3/8, 1/2	–	1/4, 3/8, 1/2, 3/4	1/4, 3/8, 1/2, 3/4
		9	–	–	3/4, 1	3/4, 1	1/2, 3/4, 1 1/4, 1 1/2	1/2, 3/4, 1 1/4, 1 1/2
Service unit combinations MSE6								Datasheets ➔ Internet: mse6
	Combinations with fieldbus connection for measuring pressure, flow rate and consumption	6	–	–	–	–	1/2	–

Key features

Product range for service unit components of the MS series								
Type	**Description**	**Size**	**Pneumatic connection**					
			Push-in connector	**Female thread**			**Connecting plate with thread**	
				M	**G**	**NPT**	**G**	**NPT**
Individual devices								
Filter regulators MS-LFR							Datasheets ➔ Internet: ms2-lfr; ms4-lfr; ms6-lfr; ms9-lfr; ms12-lfr	
	Filter and pressure regulator in a single device, grade of filtration 5 or 40 µm	2	QS-6	M5	–	–	–	–
		4	–	–	1/8, 1/4	–	1/8, 1/4, 3/8	1/8, 1/4, 3/8
		6	–	–	1/4, 3/8, 1/2	–	1/4, 3/8, 1/2, 3/4	1/4, 3/8, 1/2, 3/4
		9	–	–	3/4, 1	3/4, 1	1/2, 3/4, 1, 1 1/4, 1 1/2	1/2, 3/4, 1, 1 1/4, 1 1/2
		12	–	–	–	–	1, 1 1/4, 1 1/2, 2	–
Filter regulators MS-LFR-B							Datasheets ➔ Internet: ms4-lfr-b; ms6-lfr-b	
	Filter and pressure regulator in a single device in polymer housing, grade of filtration 5 or 40 µm	4	–	–	1/4	–	–	–
		6	–	–	1/2	–	–	–
Filters MS-LF							Datasheets ➔ Internet: ms4-lf; ms6-lf; ms9-lf; ms12-lf	
	Grade of filtration 5 or 40 µm	4	–	–	1/8, 1/4	–	1/8, 1/4, 3/8	1/8, 1/4, 3/8
		6	–	–	1/4, 3/8, 1/2	–	1/4, 3/8, 1/2, 3/4	1/4, 3/8, 1/2, 3/4
		9	–	–	3/4, 1	3/4, 1	1/2, 3/4, 1, 1 1/4, 1 1/2	1/2, 3/4, 1, 1 1/4, 1 1/2
		12	–	–	–	–	1, 1 1/4, 1 1/2, 2	–
Fine and micro filters MS-LFM							Datasheets ➔ Internet: ms4-lfm; ms6-lfm; ms9-lfm; ms12-lfm	
	Grade of filtration 0.01 or 1 µm	4	–	–	1/8, 1/4	–	1/8, 1/4, 3/8	1/8, 1/4, 3/8
		6	–	–	1/4, 3/8, 1/2	–	1/4, 3/8, 1/2, 3/4	1/4, 3/8, 1/2, 3/4
		9	–	–	3/4, 1	3/4, 1	1/2, 3/4, 1, 1 1/4, 1 1/2	1/2, 3/4, 1, 1 1/4, 1 1/2
		12	–	–	–	–	1, 1 1/4, 1 1/2, 2	–
Activated carbon filters MS-LFX							Datasheets ➔ Internet: ms4-lfx; ms6-lfx; ms9-lfx; ms12-lfx	
	For removing liquid and gaseous oil particles	4	–	–	1/8, 1/4	–	1/8, 1/4, 3/8	1/8, 1/4, 3/8
		6	–	–	1/4, 3/8, 1/2	–	1/4, 3/8, 1/2, 3/4	1/4, 3/8, 1/2, 3/4
		9	–	–	3/4, 1	3/4, 1	1/2, 3/4, 1, 1 1/4, 1 1/2	1/2, 3/4, 1, 1 1/4, 1 1/2
		12	–	–	–	–	1, 1 1/4, 1 1/2, 2	–
Water separators MS-LWS							Datasheets ➔ Internet: ms6-lws; ms9-lws; ms12-lws	
	Remove condensate from compressed air, maintenance-free	6	–	–	1/4, 3/8, 1/2	–	1/4, 3/8, 1/2, 3/4	1/4, 3/8, 1/2, 3/4
		9	–	–	3/4, 1	3/4, 1	1/2, 3/4, 1, 1 1/4, 1 1/2	1/2, 3/4, 1, 1 1/4, 1 1/2
		12	–	–	–	–	1, 1 1/4, 1 1/2, 2	–

Key features

Product range for service unit components of the MS series								
Type	**Description**	**Size**	**Pneumatic connection**					
			Push-in connector	**Female thread**			**Connecting plate with thread**	
				M	**G**	**NPT**	**G**	**NPT**
Individual devices								
Pressure regulators MS-LR							Datasheets ➔ Internet: ms2-lr; ms4-lr; ms6-lr; ms9-lr; ms12-lr	
	For setting the required operating pressure, 4 pressure regulation ranges	2	QS-6	M5	–	–	–	–
		4	–	–	1/8, 1/4	–	1/8, 1/4, 3/8	1/8, 1/4, 3/8
		6	–	–	1/4, 3/8, 1/2	–	1/4, 3/8, 1/2, 3/4	1/4, 3/8, 1/2, 3/4
		9	–	–	3/4, 1	3/4, 1	1/2, 3/4, 1, 1 1/4, 1 1/2	1/2, 3/4, 1, 1 1/4, 1 1/2
		12	–	–	–	–	1, 1 1/4, 1 1/2, 2	–
Pressure regulators MS-LR-B							Datasheets ➔ Internet: ms4-lr-b; ms6-lr-b	
	For setting the required operating pressure, in polymer housing	4	–	–	1/4	–	–	–
		6	–	–	1/2	–	–	–
Pressure regulators MS-LRB							Datasheets ➔ Internet: ms4-lrb; ms6-lrb	
	For configuring a regulator manifold with independent pressure regulation ranges. Pressure output is to the front or rear.	4	–	–	1/4	–	1/8, 1/4, 3/8	–
		6	–	–	1/2	–	1/4, 3/8, 1/2, 3/4	–
Precision pressure regulators MS-LRP							Datasheets ➔ Internet: ms6-lrp	
	For precisely setting the required operating pressure, 4 pressure regulation ranges, pressure hysteresis 0.02 bar	6	–	–	1/4, 3/8, 1/2	–	1/4, 3/8, 1/2, 3/4	1/4, 3/8, 1/2, 3/4
Precision pressure regulators MS-LRPB							Datasheets ➔ Internet: ms6-lrpb	
	For configuring a regulator manifold with independent pressure regulation ranges. Pressure output is to the front or rear.	6	–	–	1/2	–	1/4, 3/8, 1/2, 3/4	–
Lubricators MS-LOE							Datasheets ➔ Internet: ms4-loe; ms6-loe; ms9-loe; ms12-loe	
	Add a precisely adjustable amount of oil to the compressed air. The amount of oil mist is proportional to the compressed air flow rate.	4	–	–	1/8, 1/4	–	1/8, 1/4, 3/8	1/8, 1/4, 3/8
		6	–	–	1/4, 3/8, 1/2	–	1/4, 3/8, 1/2, 3/4	1/4, 3/8, 1/2, 3/4
		9	–	–	3/4, 1	3/4, 1	1/2, 3/4, 1, 1 1/4, 1 1/2	1/2, 3/4, 1, 1 1/4, 1 1/2
		12	–	–	–	–	1, 1 1/4, 1 1/2, 2	–

Key features

Product range for service unit components of the MS series

Type	Description	Size	Pneumatic connection					
			Push-in connector	Female thread			Connecting plate with thread	
				M	G	NPT	G	NPT
Individual devices								
On/off valves MS-EM							Datasheets ➔ Internet: ms4-em; ms6-em; ms9-em; ms12-em	
	Manually actuated on/off valve for pressurising and exhausting pneumatic systems.	4	–	–	1/8, 1/4	–	1/8, 1/4, 3/8	1/8, 1/4, 3/8
		6	–	–	1/4, 3/8, 1/2	–	1/4, 3/8, 1/2, 3/4	1/4, 3/8, 1/2, 3/4
		9	–	–	3/4, 1	3/4, 1	1/2, 3/4, 1, 1 1/4, 1 1/2	1/2, 3/4, 1, 1 1/4, 1 1/2
		12	–	–	–	–	1, 1 1/4, 1 1/2, 2	–
On/off valves MS-EE							Datasheets ➔ Internet: ms4-ee; ms6-ee; ms9-ee; ms12-ee	
	Electrically actuated on/off valve for pressurising and exhausting pneumatic systems.	4	–	–	1/8, 1/4	–	1/8, 1/4, 3/8	1/8, 1/4, 3/8
		6	–	–	1/4, 3/8, 1/2	–	1/4, 3/8, 1/2, 3/4	1/4, 3/8, 1/2, 3/4
		9	–	–	3/4, 1	3/4, 1	1/2, 3/4, 1, 1 1/4, 1 1/2	1/2, 3/4, 1, 1 1/4, 1 1/2
		12	–	–	–	–	1, 1 1/4, 1 1/2, 2	–
On/off valves MS-EE-B							Datasheets ➔ Internet: ms4-ee-b; ms6-ee-b	
	Electrically actuated on/off valve in polymer housing for pressurising and exhausting pneumatic systems.	4	–	–	1/4	–	–	–
		6	–	–	1/2	–	–	–
Soft-start valves MS-DL							Datasheets ➔ Internet: ms4-dl; ms6-dl; ms12-dl	
	Pneumatically actuated soft-start valve for slowly pressurising and exhausting pneumatic systems.	4	–	–	1/8, 1/4	–	1/8, 1/4, 3/8	1/8, 1/4, 3/8
		6	–	–	1/4, 3/8, 1/2	–	1/4, 3/8, 1/2, 3/4	1/4, 3/8, 1/2, 3/4
		12	–	–	–	–	1, 1 1/4, 1 1/2, 2	–
Soft-start valves MS-DE							Datasheets ➔ Internet: ms4-de; ms6-de; ms12-de	
	Electrically actuated soft-start valve for slowly pressurising and exhausting pneumatic systems.	4	–	–	1/8, 1/4	–	1/8, 1/4, 3/8	1/8, 1/4, 3/8
		6	–	–	1/4, 3/8, 1/2	–	1/4, 3/8, 1/2, 3/4	1/4, 3/8, 1/2, 3/4
		12	–	–	–	–	1, 1 1/4, 1 1/2, 2	–
On/off valves MS-EDE-B							Datasheets ➔ Internet: ms4-ede-b; ms6-ede-b	
	Electrically actuated soft-start valve in polymer housing for slowly pressurising and exhausting pneumatic systems.	4	–	–	1/4	–	–	–
		6	–	–	1/2	–	–	–
Soft-start/quick exhaust valves MS-SV							Datasheets ➔ Internet: ms6-sv; ms9-sv	
	For gradually increasing pressurisation and quick, safe pressure reduction in pneumatic piping systems. Up to category 1, PL c.	6	–	–	1/2	–	1/4, 3/8, 1/2, 3/4	1/4, 3/8, 1/2, 3/4
		9	–	–	3/4, 1	3/4, 1	1/2, 3/4, 1, 1 1/4, 1 1/2	1/2, 3/4, 1, 1 1/4, 1 1/2
	Up to category 3, PL d. Up to category 4, PL e in the case of optional extension.	6	–	–	1/2	–	1/4, 3/8, 1/2, 3/4	1/4, 3/8, 1/2, 3/4
	Up to category 4, PL e.	6	–	–	1/2	–	1/4, 3/8, 1/2, 3/4	–

Key features

Product range for service unit components of the MS series								
Type	**Description**	**Size**	**Pneumatic connection**					
			Push-in connector	**Female thread**			**Connecting plate with thread**	
				M	**G**	**NPT**	**G**	**NPT**
Individual devices								
Membrane air dryers MS-LDM1							Datasheets ➔ Internet: ms4-ldm; ms6-ldm	
	Wear-free membrane dryer with internal air consumption	4	–	–	1/8, 1/4	–	1/8, 1/4, 3/8	1/8, 1/4, 3/8
		6	–	–	1/4, 3/8, 1/2	–	1/4, 3/8, 1/2, 3/4	1/4, 3/8, 1/2, 3/4
Branching modules MS-FRM							Datasheets ➔ Internet: ms4-frm; ms6-frm; ms9-frm; ms12-frm	
	Compressed air distributors with 4 connections	4	–	–	1/8, 1/4	–	1/8, 1/4, 3/8	–
		6	–	–	1/4, 3/8, 1/2	–	1/4, 3/8, 1/2, 3/4	–
		9	–	–	3/4, 1	3/4, 1	1/2, 3/4, 1, 1 1/4, 1 1/2	1/2, 3/4, 1, 1 1/4, 1 1/2
		12	–	–	–	–	1, 1 1/4, 1 1/2, 2	–
Distributor blocks MS-FRM-FRZ							Datasheets ➔ Internet: ms4-frm-frz; ms6-frm-frz	
	Compressed air distributors with 4 connections and half the grid width	4	–	–	–	–	–	–
		6	–	–	–	–	–	–
Flow sensors SFAM							Datasheets ➔ Internet: sfam	
	For absolute flow rate information and cumulative air consumption measurement	6	–	–	–	–	1/2	1/2
		9	–	–	–	–	1, 1 1/2	1, 1 1/2

Peripherals overview

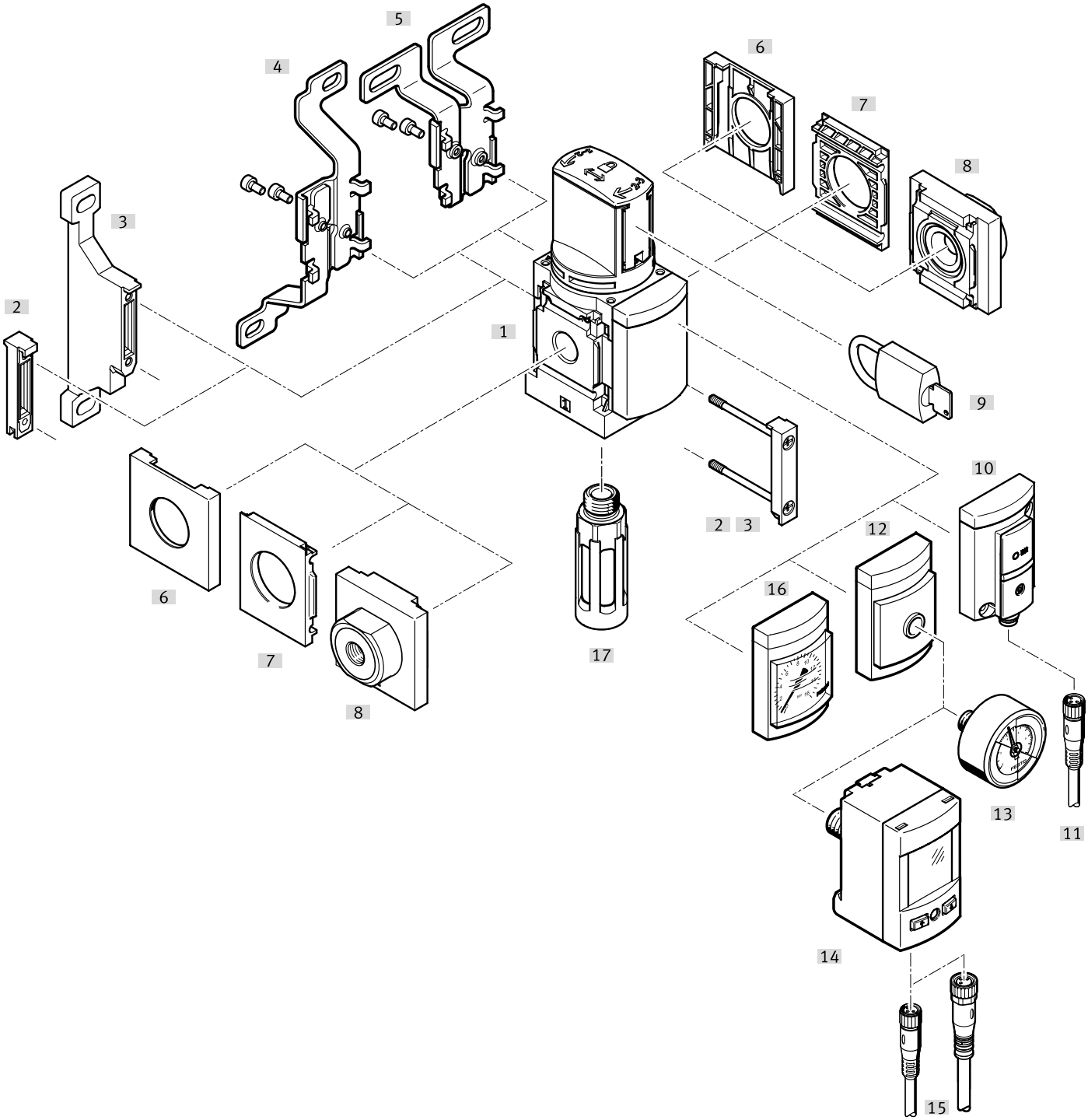

Note

Additional accessories:

- Module connector for combination with size MS4/MS6 or size MS9
  ➔ Internet: amv, rmv, armv
- Adapter for mounting on profiles
  ➔ Internet: ipm-80, ipm-40-80, ipm-80-80

Peripherals overview

Mounting attachments and accessories			
		Order code	→ Page/Internet
[1]	On/off valve	MS4/6-EM1	12
Can be ordered via the modular product system			
[3]	Mounting bracket	[WP]	18
	Mounting bracket (not shown)	[WPM]	
[4]	Mounting bracket	[WB]	
[5]	Mounting bracket	[WBM]	
[8]	Connecting plate SET[1]	[AG...]	
	Connecting plate SET[1]	[AQ...]	
[10]	Pressure sensor SDE5 with status indicator	[AD7], [AD8], [AD9], [AD10]	
[12]	Adapter for EN pressure gauge 1/8, 1/4	[A8], [A4]	
[16]	MS pressure gauge	[AG], [RG]	
[17]	Silencer	[S]	
Can be ordered as accessories			
[2]	Module connector	MS4/6-MV	ms4-mv, ms6-mv
[3]	Mounting bracket	MS4/6-WP	ms4-wp, ms6-wp
	Mounting bracket (not shown)	MS4/6-WPB/WPE/WPM	ms4-wp, ms6-wp
[4]	Mounting bracket	MS4/6-WB	ms4-wb, ms6-wb
[5]	Mounting bracket	MS4-WBM	ms4-wbm
[6]	Cover cap	MS4/6-END	ms4-end, ms6-end
[7]	Mounting plate[2]	MS4/6-AEND	ms4-aend, ms6-aend
[8]	Connecting plate SET[2]	MS4/6-AG...	ms4-ag, ms6-ag
[9]	Padlock	LRVS-D	103
[11]	Connecting cable	NEBU-M8...-LE3	103
[13]	Pressure gauge	MA	103
[14]	Pressure sensor	SPAU-...-T	102
[15]	Connecting cable	NEBU-M8...-LE4, NEBU-M12...-LE4	103
[17]	Silencer	U	103

1) Module connector [2] is included in the scope of delivery.
2) Module connector MS4/6-MV [2] or mounting bracket MS4/6-WP, WPB, WPE, WPM [3] is required for mounting.

Type codes – MS4-EM1

001	Series	
MS	MS series	

002	Size	
4	Grid dimension 40 mm	

003	Function	
EM1	On/off valve, manual	

004	Pneumatic connection	
1/8	Female thread G1/8	
1/4	Female thread G1/4	
AGA	Sub-base G1/8	
AGB	Sub-base G1/4	
AGC	Sub-base G3/8	
AQK	Sub-base 1/8 NPT	
AQN	Sub-base 1/4 NPT	
AQP	Sub-base 3/8 NPT	

005	Silencer	
	None	
S	Silencer	

006	Pressure gauge alternatives	
	None	
A4	Adapter for EN pressure gauge 1/4, without pressure gauge	
A8	Adapter for EN pressure gauge 1/8, without pressure gauge	
AD7	Pressure sensor with switching display, M8 plug, threshold value comparator, PNP, N/O	
AD8	Pressure sensor with switching display, M8 plug, threshold value comparator, PNP, N/C	
AD9	Pressure sensor with switching display, M8 plug, window comparator, PNP, N/O	
AD10	Pressure sensor with operational status indicator, M8 plug, window comparator, PNP, N/C	
AG	MS pressure gauge	
RG	Integrated pressure gauge, red/green scale	

007	Alternative pressure gauge scale	
	MS pressure gauge	
PSI	psi	
MPA	MPa	

008	Type of mounting	
	Without mounting bracket	
WP	Mounting bracket basic design	
WPM	Mounting bracket for hooking in service unit components	
WB	Mounting centrally at rear (wall mounting top and bottom), connecting plates not required	
WBM	Mounting centrally at rear (wall mounting top), connecting plates not required	

009	EU certification	
	None	
EX4	II 2GD	

010	UL certification	
	None	
UL1	cULus ordinary location for Canada and USA	

011	Flow direction	
	Flow direction from left to right	
Z	Flow direction from right to left	

012	Special material properties	
	None	
F1A	Recommended for production facilities for the manufacture of lithium-ion batteries	

Type codes – MS6-EM1

001	Series	
MS6	MS-series, size 6	

002	Size	
6	Grid dimension 62 mm	

003	Function	
EM1	On/off valve, manual	

004	Pneumatic connection	
1/4	Female thread G1/4	
3/8	Female thread G3/8	
1/2	Female thread G1/2	
AGB	Sub-base G1/4	
AGC	Sub-base G3/8	
AGD	Sub-base G1/2	
AGE	Sub-base G3/4	
AQN	Sub-base 1/4 NPT	
AQP	Sub-base 3/8 NPT	
AQR	Sub-base 1/2 NPT	
AQS	Sub-base 3/4 NPT	

005	Silencer	
	None	
S	Silencer	

006	Pressure gauge alternatives	
	None	
A4	Adapter for EN pressure gauge 1/4, without pressure gauge	
AD7	Pressure sensor with switching display, M8 plug, threshold value comparator, PNP, N/O	
AD8	Pressure sensor with switching display, M8 plug, threshold value comparator, PNP, N/C	
AD9	Pressure sensor with switching display, M8 plug, window comparator, PNP, N/O	
AD10	Pressure sensor with operational status indicator, M8 plug, window comparator, PNP, N/C	
AG	MS pressure gauge	
RG	Integrated pressure gauge, red/green scale	

007	Alternative pressure gauge scale	
	MS pressure gauge	
PSI	psi	
MPA	MPa	

008	Type of mounting	
	Without mounting bracket	
WP	Mounting bracket basic design	
WPM	Mounting bracket for hooking in service unit components	
WB	Mounting centrally at rear (wall mounting top and bottom), connecting plates not required	

009	EU certification	
	None	
EX4	II 2GD	

010	UL certification	
	None	
UL1	cULus ordinary location for Canada and USA	

011	Flow direction	
	Flow direction from left to right	
Z	Flow direction from right to left	

012	Special material properties	
	None	
F1A	Recommended for production facilities for the manufacture of lithium-ion batteries	

Datasheet

Function

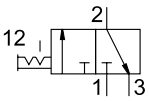

Flow rate
1200 ... 8700 l/min

Temperature range
–10 ... +60 °C

Operating pressure
0 ... 18 bar

www.festo.com

- Manually actuated on/off valve for pressurising and exhausting pneumatic systems
- The valve is switched by turning the rotary knob
- A silencer can be connected to port 3 or the exhaust air can be ducted here
- When the valve is closed, the rotary knob can be secured with a padlock
- Optional pressure gauge
- Optional pressure sensor
- Optional device variant EX4 for use in potentially explosive areas in zones 1, 2, 21 and 22

General technical data		
Size	MS4	MS6
Pneumatic connection 1, 2		
Female thread	G1/8 or G1/4	G1/4, G3/8 or G1/2
Connecting plate [AG...]	G1/8, G1/4 or G3/8	G1/4, G3/8, G1/2 or G3/4
Connecting plate [AQ...]	1/8 NPT, 1/4 NPT or 3/8 NPT	1/4 NPT, 3/8 NPT, 1/2 NPT or 3/4 NPT
Pneumatic connection 3	G1/4	G1/2
Design	Rotary switching valve	
Type of mounting	With accessories	
	In-line installation	
Mounting position	Any[1)]	
Pressure indication	Via pressure sensor for indicating the output pressure and electrical output via LCD display	
	Via pressure sensor for indicating the status of the output pressure and the electrical output	
	Via pressure gauge for displaying the output pressure	
	Via pressure gauge with red/green scale for indicating the output pressure	
	Prepared for G1/8	–
	Prepared for G1/4	
Valve function	3/2-way valve, bistable	
Exhaust function	Cannot be throttled	
Switching position indication	Knob actuator direction = flow direction	
Type of actuation	Direct	
Flow direction	Not reversible	

1) The on/off valve must be mounted vertically when combined with a pressure sensor as condensate must not collect in the pressure sensor.

Note: This product conforms to ISO 1179-1 and ISO 228-1.

Characteristic flow rate values					
Size	MS4		MS6		
Pneumatic connection 1, 2	G1/8	G1/4	G1/4	G3/8	G1/2
Standard nominal flow rate qnN[1)] [l/min]					
In main flow direction 1 → 2	1200	2200	3000	5500	8700
In relief direction 2 → 3	1900	1700	6800	6600	6200
C value [l/s*min]					
In main flow direction 1 → 2	4.6	9.0	10.7	21.2	30.8
b value					
In main flow direction 1 → 2	0.51	0.39	0.56	0.49	0.57

1) Measured at p1 = 6 bar and p2 = 5 bar, Δp = 1 bar.

Datasheet

Operating and environmental conditions				
Size	MS4		MS6	
On/off valve	Without pressure sensor	With pressure sensor	Without pressure sensor	With pressure sensor
Operating pressure [bar]	0 ... 14 (0 ... 10)[1]	0 ... 10	0 ... 18 (0 ... 10)[1]	0 ... 10
Operating medium	Compressed air to ISO 8573-1:2010 [7:4:4]			
	Inert gases			
Note on the operating/pilot medium	Lubricated operation possible (in which case lubricated operation will always be required)			
Ambient temperature [°C]	–10 ... +60	0 ... +50	–10 ... +60	0 ... +50
Temperature of medium [°C]	–10 ... +60	0 ... +50	–10 ... +60	0 ... +50
Corrosion resistance class CRC[2]	2			
Food-safe[3]	See supplementary material information			
UL certification[3]	c UL us - Recognized (OL)			

1) Value in brackets applies to MS4/MS6-EM1 with UL certification.
2) More information www.festo.com/x/topic/crc
3) More information: www.festo.com/catalogue/ms-em1 ➔ Support/Downloads.

ATEX	
EU certification	EX4
ATEX category for gas	II 2G
Type of (ignition) protection for gas	Ex h IIC T6 Gb X
ATEX category for dust	II 2D
Type of (ignition) protection for dust	Ex h IIIC T60°C Db X
Explosion ambient temperature	–10°C ≤ Ta ≤ +60 °C
Explosion protection certification outside the EU	EPL Db (GB) EPL Gb (GB)
CE marking (see declaration of conformity)[1]	To EU Explosion Protection Directive (ATEX)
UKCA marking (see declaration of conformity)[1]	To UK EX instructions

1) More information: www.festo.com/catalogue/ms-em1 ➔ Support/Downloads.

Weight [g]		
Size	MS4	MS6
On/off valve	190	580
On/off valve with silencer	210	655

Materials

Sectional view

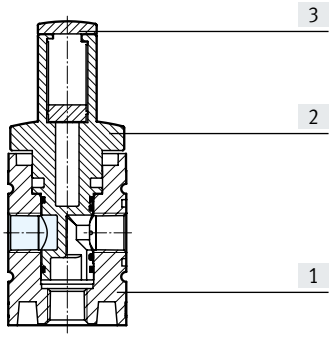

On/off valve		
[1]	Housing	Die-cast aluminium
[2]	Rotary piston	Reinforced PA
[3]	Slide	Reinforced PA
–	Seals	NBR, TPE-U(PU)
Note on materials		RoHS-compliant
LABS (PWIS) conformity		VDMA24364-B1/B2-L
Suitable for the production of Li-ion batteries[1]		Metals with more than 1% copper, zinc or nickel by mass are excluded from use. Exceptions are nickel in steel, chemically nickel-plated surfaces, circuit boards, cables, electrical plug connectors and coils

1) Applies for F1A products

Note

Foreign particles can adhere to the product or arise during installation.

Depending on the application, it may be necessary to purge the product with clean compressed air, to clean it after installation and to operate it with ducted exhaust air.

Datasheet

Dimensions – Basic version Download CAD data ➔ www.festo.com

With female thread, with cover plate

MS4

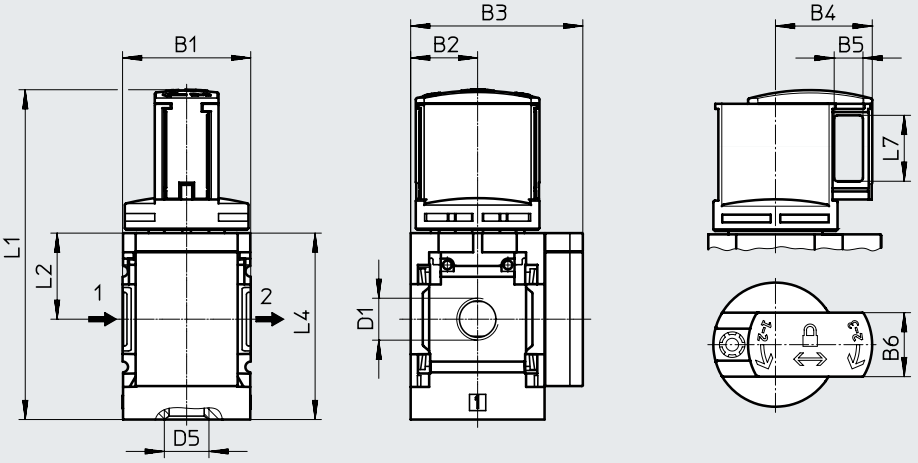

➔ Flow direction

MS6

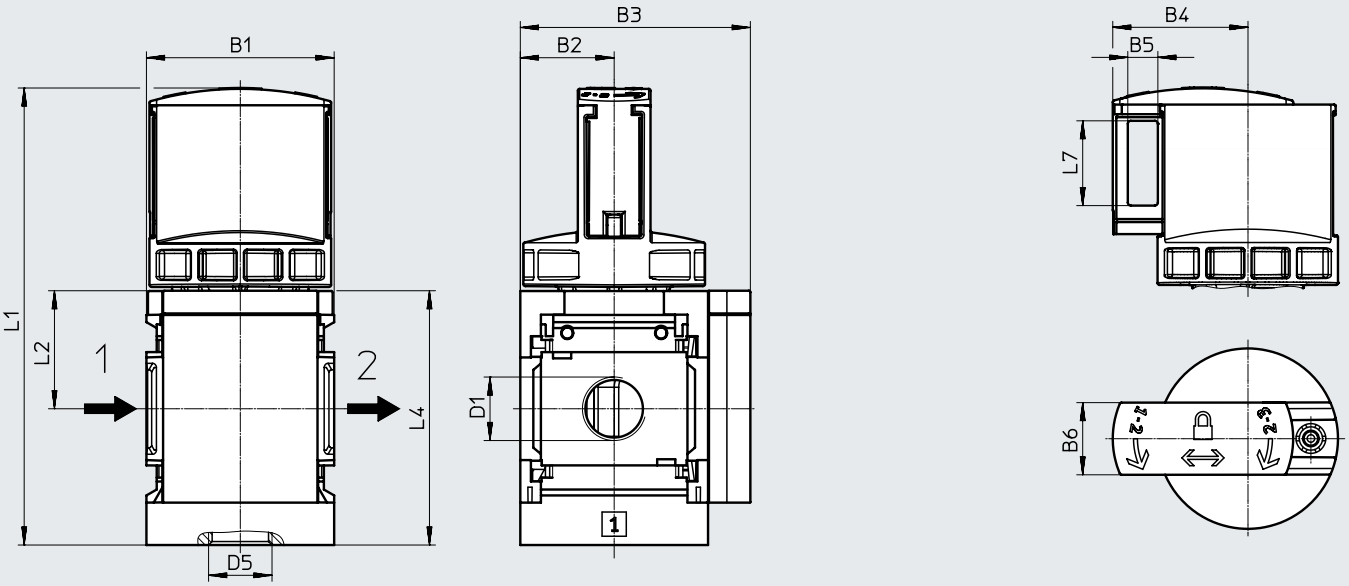

➔ Flow direction

Type	B1	B2	B3	B4	B5	B6	D1	D5	L1	L2	L4	L7
MS4-...												
MS4-EM1-1/8	40	21	54	30	9	20	G1/8	G1/4	104	27	59	21
MS4-EM1-1/4							G1/4					
MS6-...												
MS6-EM1-1/4	62	31	76	45	10	24	G1/4	G1/2	150.7	39	84.5	28.2
MS6-EM1-3/8							G3/8					
MS6-EM1-1/2							G1/2					

Note: This product conforms to ISO 1179-1 and ISO 228-1.

Datasheet

Dimensions – Pressure gauges/pressure gauge alternatives

Download CAD data ➔ www.festo.com

[AG] Integrated MS pressure gauge with standard scale
[RG] Integrated MS pressure gauge with red/green scale

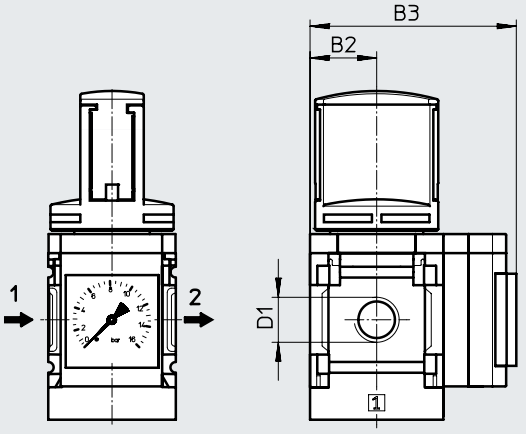

➔ Flow direction

[A8] Adapter for EN pressure gauge 1/8, without pressure gauge
[A4] Adapter for EN pressure gauge 1/4, without pressure gauge

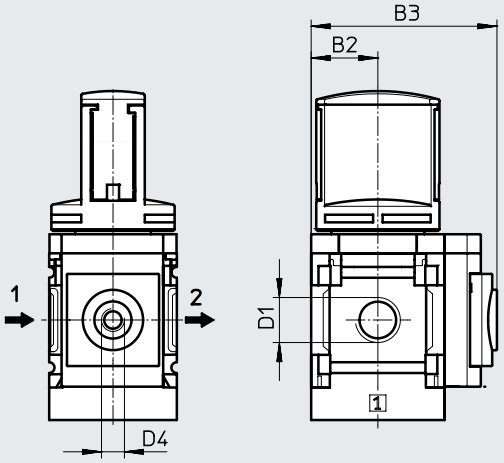

➔ Flow direction

Type	B2	B3	D1	D4
MS4-...				
MS4-EM1-1/8-...-AG	21	57	G1/8	–
MS4-EM1-1/4-...-AG			G1/4	
MS4-EM1-1/8-...-RG	21	58.5	G1/8	–
MS4-EM1-1/4-...-RG			G1/4	
MS4-EM1-1/8-...-A8	21	58.5	G1/8	G1/8
MS4-EM1-1/4-...-A8			G1/4	
MS4-EM1-1/8-...-A4	21	58.5	G1/8	G1/4
MS4-EM1-1/4-...-A4			G1/4	
MS6-...				
MS6-EM1-1/4-...-AG	31	77	G1/4	–
MS6-EM1-3/8-...-AG			G3/8	
MS6-EM1-1/2-...-AG			G1/2	
MS6-EM1-1/4-...-RG	31	78.5	G1/4	–
MS6-EM1-3/8-...-RG			G3/8	
MS6-EM1-1/2-...-RG			G1/2	
MS6-EM1-1/4-...-A4	31	78.5	G1/4	G1/4
MS6-EM1-3/8-...-A4			G3/8	
MS6-EM1-1/2-...-A4			G1/2	

Datasheet

Dimensions – Pressure sensor

Download CAD data ➔ www.festo.com

Datasheets ➔ Internet: sde5

[AD7], [AD8], [AD9], [AD10] Pressure sensor with status indicator

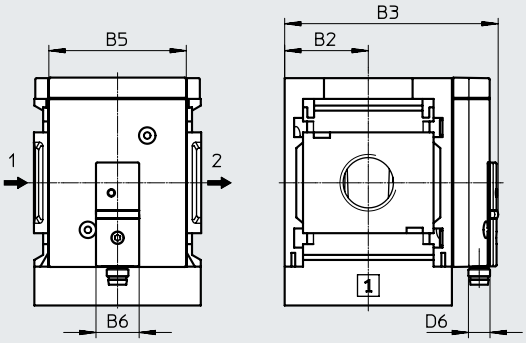

➔ Flow direction

[AD7]:
SDE5-D10-O-...-P-M8 with 1x 3-pin M8 plug, threshold value comparator, 1 switching output PNP, N/O contact

[AD8]:
SDE5-D10-C-...-P-M8 with 1x 3-pin M8 plug, threshold value comparator, 1 switching output PNP, N/C contact

[AD9]:
SDE5-D10-O3-...-P-M8 with 1x 3-pin M8 plug, window comparator, 1 switching output PNP, N/O contact

[AD10]:
SDE5-D10-C3-...-P-M8 with 1x 3-pin M8 plug, window comparator, 1 switching output PNP, N/C contact

Type	B2	B3	B5	B6	D6	L5	L6
MS4-...							
MS4-...-AD7, AD8, AD9, AD10	21	59.1	~32	16	M8x1	–	–
MS6-...							
MS6-...-AD7, AD8, AD9, AD10	31	79.1	~51	16	M8x1	–	–

Datasheet

Dimensions – Silencer Download CAD data ➔ www.festo.com

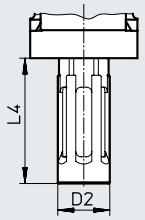

Type	D2	L4
MS4-EM1-...-S	20	49
MS6-EM1-...-S	28	109

★ Core Range

Ordering data

Size	Connection	Flow direction	Part no.	Type
MS4	G1/4	From left to right	★ **541258**	**MS4-EM1-1/4**
MS6	G1/2	From left to right	★ **541267**	**MS6-EM1-1/2**
With silencer				
MS4	G1/4	From left to right	★ **541259**	**MS4-EM1-1/4-S**
MS6	G1/2	From left to right	★ **541268**	**MS6-EM1-1/2-S**

Ordering data

Size	Connection	Flow direction	Part no.	Type
MS4	G1/8	From left to right	**541262**	**MS4-EM1-1/8**
	G1/4	From right to left	**541261**	**MS4-EM1-1/4-Z**
		From left to right	**8183561**	**MS4-EM1-1/4-F1A**[1]
MS6	G1/4	From left to right	**541271**	**MS6-EM1-1/4**
	G3/8	From left to right	**541275**	**MS6-EM1-3/8**
	G1/2	From right to left	**541270**	**MS6-EM1-1/2-Z**
		From left to right	**8183562**	**MS6-EM1-1/2-F1A**[1]
With silencer				
MS4	G1/8	From left to right	**541263**	**MS4-EM1-1/8-S**
	G1/4	From right to left	**541260**	**MS4-EM1-1/4-S-Z**
MS6	G1/4	From left to right	**541272**	**MS6-EM1-1/4-S**
	G3/8	From left to right	**541276**	**MS6-EM1-3/8-S**
	G1/2	From right to left	**541269**	**MS6-EM1-1/2-S-Z**

1) Recommended for production plants for manufacturing lithium-ion batteries

Ordering data – Modular product system

Ordering table Grid dimension [mm]	40	62	Conditions	Code	Enter code
Module no.	**541266**	**541279**			
Series	Standard			**MS**	MS
Size	4	6		**...**	
Function	On/off valve, manual			**-EM1**	-EM1
Pneumatic connection	Female thread G1/8	–	[1]	**-1/8**	
	Female thread G1/4	Female thread G1/4	[1]	**-1/4**	
	–	Female thread G3/8	[1]	**-3/8**	
	–	Female thread G1/2	[1]	**-1/2**	
	Connecting plate G1/8	–		**-AGA**	
	Connecting plate G1/4	Connecting plate G1/4		**-AGB**	
	Connecting plate G3/8	Connecting plate G3/8		**-AGC**	
	–	Connecting plate G1/2		**-AGD**	
	–	Connecting plate G3/4		**-AGE**	
	Connecting plate 1/8 NPT	–	[1]	**-AQK**	
	Connecting plate 1/4 NPT	Connecting plate 1/4 NPT	[1]	**-AQN**	
	Connecting plate 3/8 NPT	Connecting plate 3/8 NPT	[1]	**-AQP**	
	–	Connecting plate 1/2 NPT	[1]	**-AQR**	
	–	Connecting plate 3/4 NPT	[1]	**-AQS**	
Rotary knob colour	Standard (black/blue)				
	Red			**-R**	
Silencer	None				
	Silencer			**-S**	
Pressure gauge/pressure gauge alternatives	None				
	MS pressure gauge, bar			**-AG**	
	Adapter for EN pressure gauge 1/8, without pressure gauge	–		**-A8**	
	Adapter for EN pressure gauge 1/4, without pressure gauge			**-A4**	
	Integrated pressure gauge, red/green scale			**-RG**	
	Pressure sensor with status indicator, plug M8, threshold value comparator, PNP, N/O contact		[1] [2]	**-AD7**	
	Pressure sensor with status indicator, plug M8, threshold value comparator, PNP, N/C contact		[1] [2]	**-AD8**	
	Pressure sensor with status indicator, plug M8, window comparator, PNP, N/O contact		[1] [2]	**-AD9**	
	Pressure sensor with status indicator, plug M8, window comparator, PNP, N/C contact		[1] [2]	**-AD10**	
Alternative pressure gauge scale	None				
	psi		[3]	**-PSI**	
	MPa		[4]	**-MPA**	

[1] 1/8; 1/4; 3/8; 1/2, AQK, AQN, AQP, AQR, AQS, AD7 ... AD10, WPM — Not with EU EX4 certification.
[2] AD7 ... AD10 — Measuring range max. 10 bar.
[3] PSI — Only in combination with pressure gauge AG.
[4] MPA — Only in combination with pressure gauge AG or RG.

Ordering data – Modular product system

Ordering table Grid dimension [mm]	40	62	Conditions	Code		Enter code
Type of mounting	Without mounting bracket					
	Mounting bracket standard design		[5]	**-WP**		
	Mounting bracket for hooking in service unit components		[1] [5]	**-WPM**		
	Mounting bracket centrally at rear (wall mounting top and bottom), connecting plates not required			**-WB**		
	Mounting bracket centrally at rear (wall mounting top), connecting plates not required	–		**-WBM**		
EU certification	None					
	II 2GD to EU Explosion Protection Directive (ATEX)			**-EX4**		
UL certification	None					
	cULus, ordinary location for Canada and USA			**-UL1**		
Flow direction	Flow direction from left to right					
	Flow direction from right to left			**-Z**		

[1] 1/8; 1/4; 3/8; 1/2, AQK, AQN, AQP, AQR, AQS, AD7 ... AD10, WPM — Not with EU EX4 certification.

[5] WP, WPM — Only with connecting plate AGA, AGB, AGC, AGD, AGE, AQK, AQN, AQP, AQR or AQS.

Peripherals overview

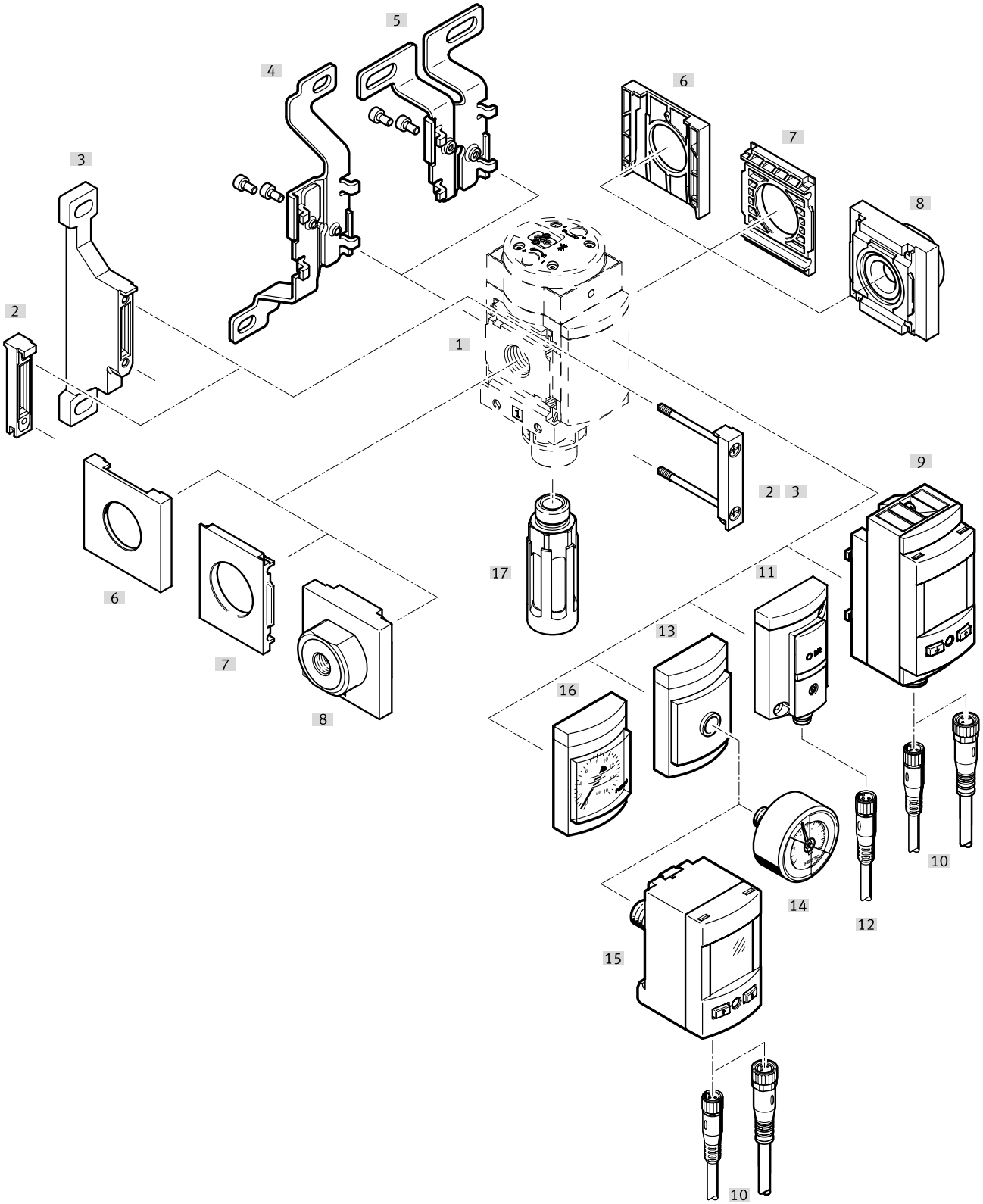

Note

Additional accessories:

- Module connector for combination with size MS4/MS6 or size MS9
  ➔ Internet: amv, rmv, armv
- Adapter for mounting on profiles
  ➔ Internet: ipm-80, ipm-40-80, ipm-80-80

Peripherals overview

Supply voltage
[V24], [V24P], [10V24], [10V24C], [V110], [V230]

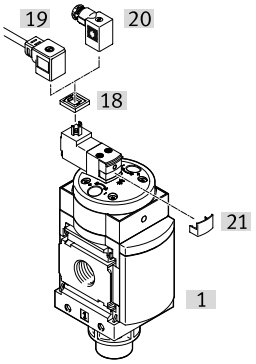

Supply voltage
[10V24D], [10V24F], [10V24P]

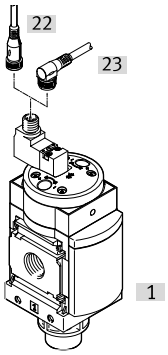

Mounting attachments and accessories			
		Order code	➔ Page/Internet
[1]	On/off valve	MS4/6-EE	24
Can be ordered via the modular product system			
[3]	Mounting bracket	[WP]	32
	Mounting bracket (not shown)	[WPM]	
[4]	Mounting bracket	[WB]	
[5]	Mounting bracket	[WBM]	
[8]	Connecting plate SET[1)]	[AG...]	
	Connecting plate SET[1)]	[AQ...]	
[9]	Pressure sensor SPAU with LCD display	[AD11], [AD12]	
[11]	Pressure sensor SDE5 with status indicator	[AD7], [AD8], [AD9], [AD10]	
[13]	Adapter for EN pressure gauge 1/8, 1/4	[A8], [A4]	
[16]	MS pressure gauge	[AG], [RG]	
[17]	Silencer	[S]	
Can be ordered as accessories			
[2]	Module connector	MS4/6-MV	ms4-mv, ms6-mv
[3]	Mounting bracket	MS4/6-WP	ms4-wp, ms6-wp
	Mounting bracket (not shown)	MS4/6-WPB/WPE/WPM	ms4-wp, ms6-wp
[4]	Mounting bracket	MS4/6-WB	ms4-wb, ms6-wb
[5]	Mounting bracket	MS4-WBM	ms4-wbm
[6]	Cover cap	MS4/6-END	ms4-end, ms6-end
[7]	Mounting plate[2)]	MS4/6-AEND	ms4-aend, ms6-aend
[8]	Connecting plate SET[2)]	MS4/6-AG...	ms4-ag, ms6-ag
[10]	Connecting cable	NEBU-M8...-LE4, NEBU-M12...-LE4	103
[12]	Connecting cable	NEBU-M8...-LE3	103
[14]	Pressure gauge	MA	103
[15]	Pressure sensor	SPAU-...-T	102
[17]	Silencer	U	103
[18]	Illuminating seal	MEB-LD	102
[19]	Plug socket with cable	KMEB	102
[20]	Plug socket[3)]	MSSD-EB	102
[21]	Locking clip	CPV18-HV	102
[22]	Connecting cable	NEBU-M12G5	103
[23]	Connecting cable	NEBU-M12W5	103

1) Module connector [2] is included in the scope of delivery.
2) Module connector MS4/6-MV [2] or mounting bracket MS4/6-WP, WPB, WPE, WPM [3] is required for mounting.
3) For on/off valve MS...-V24P and MS...-V24-...-EX2, the plug socket is included in the scope of delivery.

Type codes

001	Series	
MS	MS series	

002	Size	
4	Grid dimension 40 mm	

003	Function	
EE	On/off valve, electric	

004	Pneumatic connection	
1/8	Female thread G1/8	
1/4	Female thread G1/4	
AGA	Sub-base G1/8	
AGB	Sub-base G1/4	
AGC	Sub-base G3/8	
AQK	Sub-base 1/8 NPT	
AQN	Sub-base 1/4 NPT	
AQP	Sub-base 3/8 NPT	

005	Supply voltage	
V230	230 V AC (connection pattern to EN 175301)	
10V24	24 V DC, 10 bar, connection pattern to EN 175301	
V110	110 V AC (connection pattern to EN 175301)	
10V24C	24 V DC, 10 bar (connection pattern to EN 175301) without manual override	
10V24D	24 V DC, 10 bar, M12 (connection pattern to EN 60947-5-2) without manual override	
10V24F	24 V DC, 10 bar, M12 (connection pattern to EN 60947-5-2). Manual override on the pilot actuator non-detenting, internally detenting	
10V24P	24 V DC, 10 bar, M12 plug socket adapter (connection pattern to EN 60947-5-2)	
V24	24 V DC (connection pattern to EN 175301)	
V24P	24 V DC plug (connection pattern M12 to DESINA)	

006	Silencer	
	None	
S	Silencer	

007	Pressure gauge alternatives	
	None	
A4	Adapter for EN pressure gauge 1/4, without pressure gauge	
A8	Adapter for EN pressure gauge 1/8, without pressure gauge	
AD7	Pressure sensor with switching display, M8 plug, threshold value comparator, PNP, N/O	
AD8	Pressure sensor with switching display, M8 plug, threshold value comparator, PNP, N/C	
AD9	Pressure sensor with switching display, M8 plug, window comparator, PNP, N/O	
AD10	Pressure sensor with operational status indicator, M8 plug, window comparator, PNP, N/C	
AD11	Pressure sensor with LCD display, M12 plug, 4-pin, IO-Link®, PNP, NPN, 0...10 V, 1...5 V, 4...20 mA	
AD12	Pressure sensor with LCD display, M8 plug, 4-pin, IO-Link®, PNP, NPN, 0...10 V, 1...5 V, 4...20 mA	
AG	MS pressure gauge	
RG	Integrated pressure gauge, red/green scale	

008	Alternative pressure gauge scale	
	MS pressure gauge	
PSI	psi	
MPA	MPa	

009	Type of mounting	
	Without mounting bracket	
WP	Mounting bracket basic design	
WPM	Mounting bracket for hooking in service unit components	
WB	Mounting centrally at rear (wall mounting top and bottom), connecting plates not required	
WBM	Mounting centrally at rear (wall mounting top), connecting plates not required	

010	EU certification	
	None	
EX2	II 3GD	

011	UL certification	
	None	
UL1	cULus ordinary location for Canada and USA	

012	Flow direction	
	Flow direction from left to right	
Z	Flow direction from right to left	

Type codes

001	Series	
MS6	MS-series, size 6	

002	Size	
6	Grid dimension 62 mm	

003	Function	
EE	On/off valve, electric	

004	Pneumatic connection	
1/4	Female thread G1/4	
3/8	Female thread G3/8	
1/2	Female thread G1/2	
AGB	Sub-base G1/4	
AGC	Sub-base G3/8	
AGD	Sub-base G1/2	
AGE	Sub-base G3/4	
AQN	Sub-base 1/4 NPT	
AQP	Sub-base 3/8 NPT	
AQR	Sub-base 1/2 NPT	
AQS	Sub-base 3/4 NPT	

005	Supply voltage	
V230	230 V AC (connection pattern to EN 175301)	
10V24	24 V DC, 10 bar, connection pattern to EN 175301	
V110	110 V AC (connection pattern to EN 175301)	
10V24C	24 V DC, 10 bar (connection pattern to EN 175301) without manual override	
10V24D	24 V DC, 10 bar, M12 (connection pattern to EN 60947-5-2) without manual override	
10V24F	24 V DC, 10 bar, M12 (connection pattern to EN 60947-5-2). Manual override on the pilot actuator non-detenting, internally detenting	
10V24P	24 V DC, 10 bar, M12 plug socket adapter (connection pattern to EN 60947-5-2)	
V24	24 V DC (connection pattern to EN 175301)	
V24P	24 V DC plug (connection pattern M12 to DESINA)	

006	Silencer	
	None	
S	Silencer	

007	Pressure gauge alternatives	
	None	
A4	Adapter for EN pressure gauge 1/4, without pressure gauge	
A8	Adapter for EN pressure gauge 1/8, without pressure gauge	
AD7	Pressure sensor with switching display, M8 plug, threshold value comparator, PNP, N/O	
AD8	Pressure sensor with switching display, M8 plug, threshold value comparator, PNP, N/C	
AD9	Pressure sensor with switching display, M8 plug, window comparator, PNP, N/O	
AD10	Pressure sensor with operational status indicator, M8 plug, window comparator, PNP, N/C	
AD11	Pressure sensor with LCD display, M12 plug, 4-pin, IO-Link®, PNP, NPN, 0...10 V, 1...5 V, 4...20 mA	
AD12	Pressure sensor with LCD display, M8 plug, 4-pin, IO-Link®, PNP, NPN, 0...10 V, 1...5 V, 4...20 mA	
AG	MS pressure gauge	
RG	Integrated pressure gauge, red/green scale	

008	Alternative pressure gauge scale	
	MS pressure gauge	
PSI	psi	
MPA	MPa	

009	Type of mounting	
	Without mounting bracket	
WP	Mounting bracket basic design	
WPM	Mounting bracket for hooking in service unit components	
WB	Mounting centrally at rear (wall mounting top and bottom), connecting plates not required	

010	EU certification	
	None	
EX2	II 3GD	

011	UL certification	
	None	
UL1	cULus ordinary location for Canada and USA	

012	Flow direction	
	Flow direction from left to right	
Z	Flow direction from right to left	

Datasheet

Function

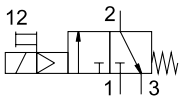

Flow rate
1000 ... 7000 l/min

Temperature range
–10 ... +60 °C

Operating pressure
4 ... 18 bar

www.festo.com

- Electrically actuated on/off valve for pressurising and exhausting pneumatic systems
- With solenoid coil, without plug socket
- Choice of three voltage ranges
- Ducted exhaust is possible via a threaded connection with silencer
- Manual override: non-detenting and detenting (variant 10V24/10V24F non-detenting only)
- Solenoid actuator can be repositioned by 180°
- Optional pressure sensor
- Optional device variant EX2 for use in potentially explosive areas in zones 2 and 22

General technical data

Size		MS4	MS6
Pneumatic connection 1, 2			
Female thread		G1/8 or G1/4	G1/4, G3/8 or G1/2
Connecting plate	[AG...]	G1/8, G1/4 or G3/8	G1/4, G3/8, G1/2 or G3/4
	[AQ...]	1/8 NPT, 1/4 NPT or 3/8 NPT	1/4 NPT, 3/8 NPT, 1/2 NPT or 3/4 NPT
Pneumatic connection 3		G1/4	G1/2
Design		Piston spool valve	
Type of mounting		With accessories	
		In-line installation	
Mounting position		Any[1)]	
Pressure indication		Via pressure sensor for indicating the output pressure and electrical output via LCD display	
		Via pressure sensor for indicating the status of the output pressure and the electrical output	
		Via pressure gauge for displaying the output pressure	
		Via pressure gauge with red/green scale for indicating the output pressure	
		Prepared for G1/8	
		Prepared for G1/4	
Valve function		3/2-way valve, closed, single solenoid	
Exhaust function		Cannot be throttled	
Manual override			
With supply voltage	[10V24], [10V24F]	Non-detenting	
	[V24], [V24P], [10V24P], [V110], [V230]	Non-detenting/detenting	
	[10V24C], [10V24D]	None	
Reset method		Mechanical spring	
Switching position indication		With accessories	
Type of actuation		Piloted	
Pilot air supply		Internal	
Flow direction		Not reversible	

1) The on/off valve must be mounted vertically when combined with a pressure sensor as condensate must not collect in the pressure sensor.

Note: This product conforms to ISO 1179-1 and ISO 228-1.

Datasheet

Electrical data		
Characteristic coil data		
With supply voltage	[V24], [V24P]	24 V DC: 1.5 W; permissible voltage fluctuations –25%/+10%
	[10V24...]	24 V DC: 1.8 W; permissible voltage fluctuations –15%/+10%
	[V110]	110 V AC: 50/60 Hz; pick-up power 3.0 VA; holding power 2.4 VA; permissible voltage fluctuations ±10%
	[V230]	230 V AC: 50/60 Hz; pick-up power 3.0 VA; holding power 2.4 VA; permissible voltage fluctuations –14%/+10%
Electrical connection		
With supply voltage	[V24], [10V24], [10V24C], [V110], [V230]	Plug, square design to EN 175301-803, type C
	[V24P], [10V24D], [10V24F], [10V24P]	M12x1 to ISO 20401 in line with EN 61076-2-101
Degree of protection for solenoid coil		IP65
Duty cycle [%]		100

Characteristic flow rate values					
Size	MS4		MS6		
Pneumatic connection 1, 2	G1/8	G1/4	G1/4	G3/8	G1/2
Standard nominal flow rate qnN[1] [l/min]					
In main flow direction 1 ➔ 2	1000	2000	2600	5500	7000
In relief direction 2 ➔ 3	1600	1600	7000	6200	5500
C value [l/s*min]					
In main flow direction 1 ➔ 2	4.5	9.5	11.0	22.0	29.0
b value					
In main flow direction 1 ➔ 2	0.5	0.44	0.5	0.5	0.4

1) Measured at p1 = 6 bar and p2 = 5 bar, Δp = 1 bar.

Operating and environmental conditions						
Size	MS4			MS6		
On/off valve	Without pressure sensor		With pressure sensor	Without pressure sensor		With pressure sensor
Supply voltage	[V24], [V24P], [V110], [V230]	[10V24...]		[V24], [V24P], [V110], [V230]	[10V24...]	
Operating pressure [bar]	4 ... 14 (4 ... 10)[1]	4 ... 10	4 ... 10	4 ... 18 (4 ... 10)[1]	4 ... 10	4 ... 10
Operating medium	Compressed air to ISO 8573-1:2010 [7:4:4]					
	Inert gases					
Note on the operating/pilot medium	Lubricated operation possible (in which case lubricated operation will always be required)					
Ambient temperature [°C]	–10 ... +60	–10 ... +50	0 ... +50	–10 ... +60	–10 ... +50	0 ... +50
Temperature of medium [°C]	–10 ... +60	–10 ... +50	0 ... +50	–10 ... +60	–10 ... +50	0 ... +50
Corrosion resistance class CRC[2]	2					
Food-safe[3]	See supplementary material information (except for solenoid valve)					
UL certification[3]	c UL us - Recognized (OL)					
CE marking (see declaration of conformity)[3]	To EU EMC Directive					
	To EU Low Voltage Directive					
	To EU RoHS Directive					
UKCA marking (see declaration of conformity)[3]	To UK instructions for EMC					
	To UK RoHS instructions					
	To UK regulations for electrical equipment					
KC marking	–	–	KC EMC	–	–	KC EMC

1) Value in brackets applies to MS4/MS6-EE with UL certification or with silencer in combination with EU certification.
2) More information www.festo.com/x/topic/crc
3) More information: www.festo.com/catalogue/ms-ee ➔ Support/Downloads.

Datasheet

ATEX EU certification	[EX2]
ATEX category for gas	II 3G
Type of (ignition) protection for gas	Ex nA IIC T4 X Gc
ATEX category for dust	II 3D
Type of (ignition) protection for dust	Ex tc IIIC T105°C IP65 Dc X
Explosion ambient temperature	–10°C ≤ Ta ≤ +60 °C
CE marking (see declaration of conformity)[1]	To EU Explosion Protection Directive (ATEX)
UKCA marking (see declaration of conformity)[1]	To UK EX instructions
Explosion protection certification outside the EU	EPL Dc (GB)
	EPL Gc (GB)

1) More information: www.festo.com/catalogue/ms-ee → Support/Downloads.

Weight [g] Size	MS4	MS6
On/off valve	273	740
On/off valve with silencer	289	816

Materials

Sectional view

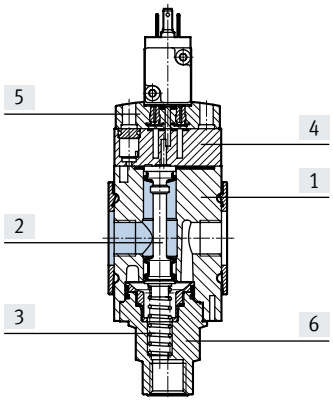

On/off valve		
[1]	Housing	Die-cast aluminium
[2]	Piston	NBR/aluminium
[3]	Springs	High-alloy stainless steel
[4]	End cover	PA
[5]	Plate	PA
[6]	Socket end connection	PA
–	Seals	NBR
Note on materials		RoHS-compliant
LABS (PWIS) conformity		VDMA24364-B1/B2-L

Manual override

[V24], [V24P], [V110], [V230] Supply voltage

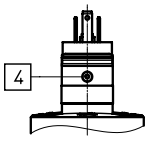

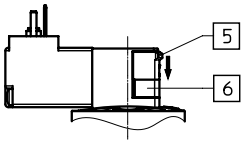

[4] Manual override: non-detenting (as supplied)
[5] Spool
[6] Cover

Note

For detenting manual override, remove the grey cover [6] and push the spool [5] downwards.

[10V24], [10V24F], [10V24P] Supply voltage

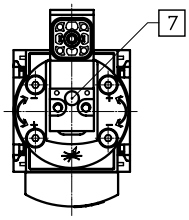

[7] Detenting and non-detenting manual override.
[10V24] and [10V24F] non-detenting only.

Datasheet

Dimensions – Basic version Download CAD data ➔ www.festo.com

With female thread, with cover plate

[V24], [10V24], [10V24C], [V110], [V230]
Supply voltage

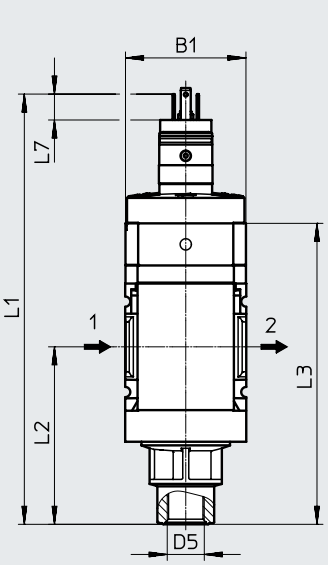

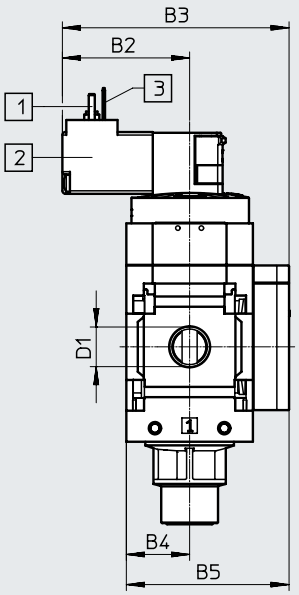

[10V24D], [10V24F], [10V24P]
Supply voltage

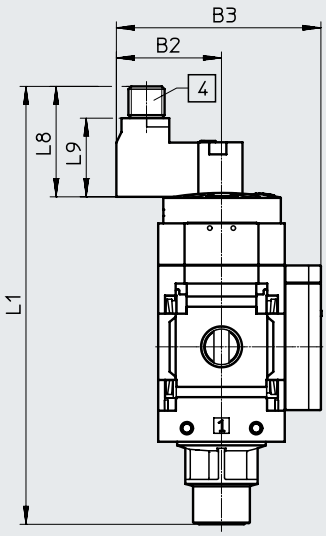

[V24P]
Supply voltage

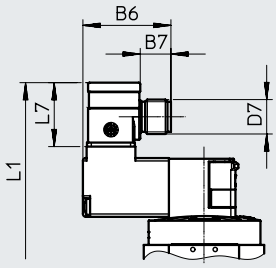

1 = not assigned
2 = not assigned
3 = com (–)
4 = Signal (+) solenoid 14

[1] Plug connection to EN 175301-803

[2] Solenoid actuator can be repositioned by 180°, i.e. solenoid points to the front

[3] PIN for solenoid actuators 110 V and 230 V only

[4] Electrical connection M12x1 to ISO 20401 conforming to EN 61076-2-101, 4-pin version for connecting cable NEBU-M12

➔ Flow direction

Type	B1	B2		B3		B4	B5	B6	B7	D1	D5	D7
		[V24] [V24P] [V110] [V230]	[10V24] [10V24C] [10V24D] [10V24F] [10V24P]	[V24] [V24P] [V110] [V230]	[10V24] [10V24C] [10V24D] [10V24F] [10V24P]							
MS4-...												
MS4-EE-1/8	40	42	35	75	68	21	54	31	11	G1/8	G1/4	M12x1
MS4-EE-1/4										G1/4		
MS6-...												
MS6-EE-1/4	62	52	45	97	90	31	76	31	11	G1/4	G1/2	M12x1
MS6-EE-3/8										G3/8		
MS6-EE-1/2										G1/2		

Type	L1					L2	L3	L7			L8	L9
	[V24] [V110] [V230]	[V24P]	[V24-EX2]	[10V24] [10V24C]	[10V24D] [10V24F] [10V24P]				[V24P]	[V24-EX2]		
MS4-...												
MS4-EE-1/8	142.8	156[1)]	160[1)]	140	145	59	100	8.6	22[1)]	26[1)]	37	26
MS4-EE-1/4												
MS6-...												
MS6-EE-1/4	186	199[1)]	203[1)]	183	188	84	143	8.6	22[1)]	26[1)]	37	27.5
MS6-EE-3/8												
MS6-EE-1/2												

1) Measured with plug socket MSSD-EB (included in the scope of delivery).

Note: This product conforms to ISO 1179-1 and ISO 228-1.

Datasheet

Dimensions – Pressure gauges/pressure gauge alternatives

Download CAD data ➔ www.festo.com

[AG] Integrated MS pressure gauge with standard scale
[RG] Integrated MS pressure gauge with red/green scale

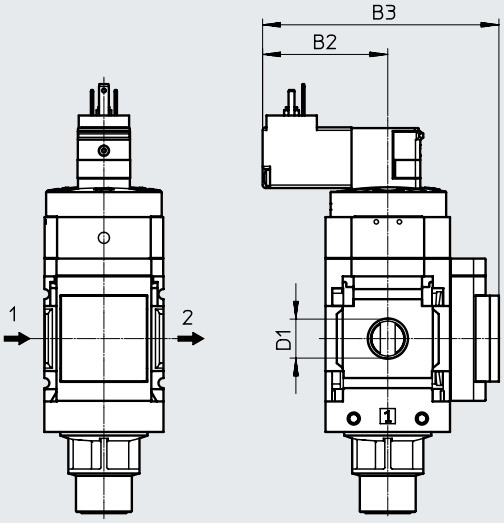

➔ Flow direction

[A8] Adapter for EN pressure gauge 1/8, without pressure gauge
[A4] Adapter for EN pressure gauge 1/4, without pressure gauge

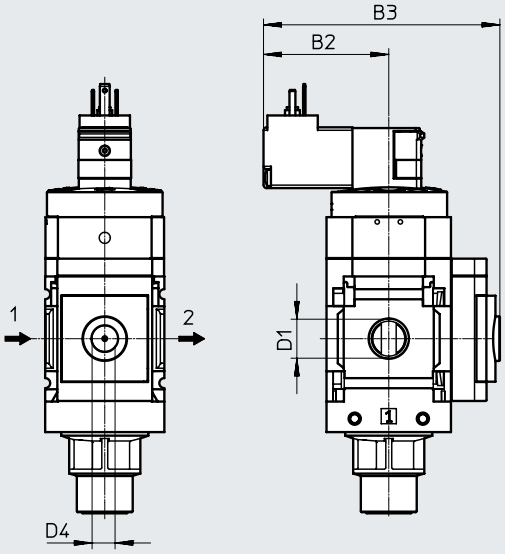

➔ Flow direction

Type	B2		B3		D1	D4
	[V24] [V24P] [V110] [V230]	[10V24] [10V24C] [10V24D] [10V24F] [10V24P]	[V24] [V24P] [V110] [V230]	[10V24] [10V24C] [10V24D] [10V24F] [10V24P]		
MS4-...						
MS4-EE-1/8-...-AG	42	35	86	79	G1/8	–
MS4-EE-1/4-...-AG					G1/4	
MS4-EE-1/8-...-RG	42	35	87.5	80.5	G1/8	–
MS4-EE-1/4-...-RG					G1/4	
MS4-EE-1/8-...-A8	42	35	79.5	72.5	G1/8	G1/8
MS4-EE-1/4-...-A8					G1/4	
MS4-EE-1/8-...-A4	42	35	79.5	72.5	G1/8	G1/4
MS4-EE-1/4-...-A4					G1/4	
MS6-...						
MS6-EE-1/4-...-AG	52	45	98	91	G1/4	–
MS6-EE-3/8-...-AG					G3/8	
MS6-EE-1/2-...-AG					G1/2	
MS6-EE-1/4-...-RG	52	45	99.5	92.5	G1/4	–
MS6-EE-3/8-...-RG					G3/8	
MS6-EE-1/2-...-RG					G1/2	
MS6-EE-1/4-...-A8	52	45	99.5	92.5	G1/4	G1/8
MS6-EE-3/8-...-A8					G3/8	
MS6-EE-1/2-...-A8					G1/2	
MS6-EE-1/4-...-A4	52	45	99.5	92.5	G1/4	G1/4
MS6-EE-3/8-...-A4					G3/8	
MS6-EE-1/2-...-A4					G1/2	

Datasheet

Dimensions – Pressure sensor

Download CAD data ➔ www.festo.com

[AD7], [AD8], [AD9], [AD10] Pressure sensor with status indicator

Datasheets ➔ Internet: sde5

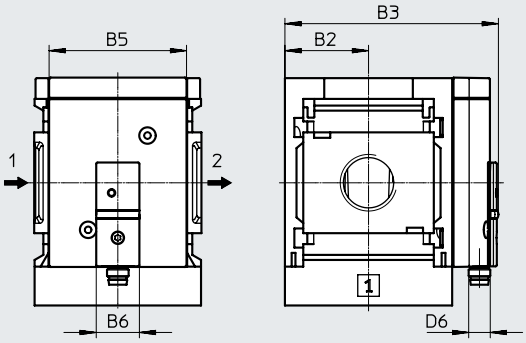

➔ Flow direction

[AD7]:
SDE5-D10-O-...-P-M8 with 1x 3-pin M8 plug, threshold value comparator, 1 switching output PNP, N/O contact

[AD8]:
SDE5-D10-C-...-P-M8 with 1x 3-pin M8 plug, threshold value comparator, 1 switching output PNP, N/C contact

[AD9]:
SDE5-D10-O3-...-P-M8 with 1x 3-pin M8 plug, window comparator, 1 switching output PNP, N/O contact

[AD10]:
SDE5-D10-C3-...-P-M8 with 1x 3-pin M8 plug, window comparator, 1 switching output PNP, N/C contact

[AD11], [AD12] Pressure sensor with LCD display

Datasheets ➔ Internet: spau

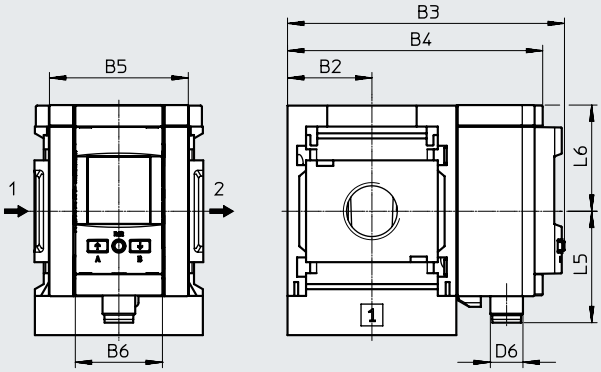

➔ Flow direction

[AD11]:
SPAU-P10R-MS...-L-PNLK-M12D with 1x 4-pin M12 plug, A-coded, switching output 2x PNP or 2x NPN switchable and 0 ... 10 V, 1 ... 5 V, 4 ... 20 mA analogue

[AD12]:
SPAU-P10R-MS...-L-PNLK-M8D with 1x 4-pin M8 plug, A-coded, switching output 2x PNP or 2x NPN switchable and 0 ... 10 V, 1 ... 5 V, 4 ... 20 mA analogue

Type	B2	B3	B4	B5	B6	D6	L5	L6
MS4-...								
MS4-...-AD7, AD8, AD9, AD10	21	59.1	–	~32	16	M8x1	–	–
MS4-...-AD11	21	81.2	73.3	32	32	M12x1	41.2	39
MS4-...-AD12						M8x1	37.9	
MS6-...								
MS6-...-AD7, AD8, AD9, AD10	31	79.1	–	~51	16	M8x1	–	–
MS6-...-AD11	31	101.8	93.7	51	32	M12x1	41.2	39
MS6-...-AD12						M8x1	37.9	

Datasheet

Dimensions – Silencer

Download CAD data ➔ www.festo.com

[S] Silencer

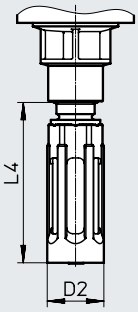

[S] Silencer
[EX2] EU certification

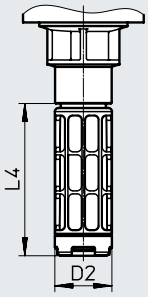

Type	D2	L4
MS4-...		
MS4-EE-...-S	20	55
MS4-EE-...-S-...-EX2	19	50.7
MS6-...		
MS6-EE-...-S	28	108
MS6-EE-...-S-...-EX2	43	80

Datasheet

★ Core Range

Ordering data					
Size	Connection	Supply voltage	Flow direction	Part no.	Type
MS4	G1/4	24 V DC	From left to right	★ 542578	MS4-EE-1/4-10V24
MS6	G1/2	24 V DC	From left to right	★ 542582	MS6-EE-1/2-10V24
With silencer					
MS4	G1/4	24 V DC	From left to right	★ 542598	MS4-EE-1/4-10V24-S
MS6	G1/2	24 V DC	From left to right	★ 542602	MS6-EE-1/2-10V24-S

Ordering data					
Size	Connection	Supply voltage	Flow direction	Part no.	Type
MS4	G1/8	24 V DC	From left to right	542580	MS4-EE-1/8-10V24
	G1/4	24 V DC	From right to left	542579	MS4-EE-1/4-10V24-Z
		110 V AC	From left to right	529535	MS4-EE-1/4-V110
		230 V AC	From left to right	529537	MS4-EE-1/4-V230
MS6	G1/4	24 V DC	From left to right	542584	MS6-EE-1/4-10V24
	G3/8	24 V DC	From left to right	542586	MS6-EE-3/8-10V24
	G1/2	24 V DC	From right to left	542583	MS6-EE-1/2-10V24-Z
		110 V AC	From left to right	529823	MS6-EE-1/2-V110
		230 V AC	From left to right	529825	MS6-EE-1/2-V230
With silencer					
MS4	G1/8	24 V DC	From left to right	542600	MS4-EE-1/8-10V24-S
	G1/4	24 V DC	From right to left	542599	MS4-EE-1/4-10V24-S-Z
		110 V AC	From left to right	538719	MS4-EE-1/4-V110-S
MS6	G1/4	24 V DC	From left to right	542604	MS6-EE-1/4-10V24-S
	G3/8	24 V DC	From left to right	542606	MS6-EE-3/8-10V24-S
	G1/2	24 V DC	From right to left	542603	MS6-EE-1/2-10V24-S-Z
		110 V AC	From left to right	538731	MS6-EE-1/2-V110-S

Ordering data – Modular product system

Ordering table Grid dimension [mm]	40	62	Conditions	Code	Enter code
Module no.	**527709**	**527682**			
Series	Standard			**MS**	MS
Size	4	6		**...**	
Function	On/off valve, electric			**-EE**	-EE
Pneumatic connection	Female thread G1/8	–	[1]	**-1/8**	
	Female thread G1/4	Female thread G1/4	[1]	**-1/4**	
	–	Female thread G3/8	[1]	**-3/8**	
	–	Female thread G1/2	[1]	**-1/2**	
	Connecting plate G1/8	–		**-AGA**	
	Connecting plate G1/4	Connecting plate G1/4		**-AGB**	
	Connecting plate G3/8	Connecting plate G3/8		**-AGC**	
	–	Connecting plate G1/2		**-AGD**	
	–	Connecting plate G3/4		**-AGE**	
	Connecting plate 1/8 NPT	–	[1]	**-AQK**	
	Connecting plate 1/4 NPT	Connecting plate 1/4 NPT	[1]	**-AQN**	
	Connecting plate 3/8 NPT	Connecting plate 3/8 NPT	[1]	**-AQP**	
	–	Connecting plate 1/2 NPT	[1]	**-AQR**	
	–	Connecting plate 3/4 NPT	[1]	**-AQS**	
Supply voltage	24 V DC (plug pattern to EN 175301) 4 ... 14 bar	4 ... 18 bar		**-V24**	
	24 V DC, M12x1 to ISO 20401 in line with EN 61076-2-101 4 ... 14 bar	4 ... 18 bar	[1]	**-V24P**	
	24 V DC (plug pattern to EN 175301), 4 ... 10 bar, manual override non-detenting		[1] [2]	**-10V24**	
	24 V DC (plug pattern to EN 175301), 4 ... 10 bar, no manual override		[1] [2]	**-10V24C**	
	24 V DC, M12x1 to ISO 20401 in line with EN 61076-2-101, 4 ... 10 bar, no manual override		[1] [2]	**-10V24D**	
	24 V DC, M12x1 to ISO 20401 in line with EN 61076-2-101, 4 ... 10 bar, manual override non-detenting		[1] [2]	**-10V24F**	
	24 V DC, M12x1 to ISO 20401 in line with EN 61076-2-101, 4 ... 10 bar, manual override non-detenting/detenting		[1] [2]	**-10V24P**	
	110 V AC (plug pattern to EN 175301) 4 ... 14 bar	4 ... 18 bar	[1]	**-V110**	
	230 V AC (plug pattern to EN 175301) 4 ... 14 bar	4 ... 18 bar	[1]	**-V230**	

[1] 1/8; 1/4; 3/8; 1/2, AQK, AQN, AQP, AQR, AQS, V24P, 10V24, 10V24C, 10V24D, 10V24F, 10V24P, V110, V230, AD7 ... AD12, WPM — Not with EU EX2 certification.

[2] 10V24, 10V24C, 10V24D, 10V24F, 10V24P — Max. operating pressure: 10 bar.

Ordering data – Modular product system

Ordering table Grid dimension [mm]	40	62	Conditions	Code		Enter code
Silencer	None					
	Silencer		[3]	**-S**		
Pressure gauge/pressure gauge alternatives	None					
	MS pressure gauge, bar			**-AG**		
	Adapter for EN pressure gauge 1/8, without pressure gauge			**-A8**		
	Adapter for EN pressure gauge 1/4, without pressure gauge			**-A4**		
	Integrated pressure gauge, red/green scale			**-RG**		
	Pressure sensor with status indicator, plug M8, threshold value comparator, PNP, N/O contact		[1] [4]	**-AD7**		
	Pressure sensor with status indicator, plug M8, threshold value comparator, PNP, N/C contact		[1] [4]	**-AD8**		
	Pressure sensor with status indicator, plug M8, window comparator, PNP, N/O contact		[1] [4]	**-AD9**		
	Pressure sensor with status indicator, plug M8, window comparator, PNP, N/C contact		[1] [4]	**-AD10**		
	Pressure sensor with LCD display, plug M12, 4-pin, IO-Link®, PNP, NPN, 0... 10 V, 1 ... 5 V, 4 ... 20 mA		[1] [4]	**-AD11**		
	Pressure sensor with LCD display, plug M8, 4-pin, IO-Link®, PNP, NPN, 0... 10 V, 1 ... 5 V, 4 ... 20 mA		[1] [4]	**-AD12**		
Alternative pressure gauge scale	None					
	psi		[5]	**-PSI**		
	MPa		[6]	**-MPA**		
Type of mounting	Without mounting bracket					
	Mounting bracket standard design		[7]	**-WP**		
	Mounting bracket for hooking in service unit components		[1] [7]	**-WPM**		
	Mounting bracket centrally at rear (wall mounting top and bottom), connecting plates not required			**-WB**		
	Mounting bracket centrally at rear (wall mounting top), connecting plates not required	–		**-WBM**		
EU certification	None					
	II 3GD to EU Explosion Protection Directive (ATEX)			**-EX2**		
UL certification	None					
	cULus, ordinary location for Canada and USA		[8]	**-UL1**		
Flow direction	Flow direction from left to right					
	Flow direction from right to left			**-Z**		

[1] 1/8; 1/4; 3/8; 1/2, AQK, AQN, AQP, AQR, AQS, V24P, 10V24, 10V24C, 10V24D, 10V24F, 10V24P, V110, V230, AD7 ... AD12, WPM — Not with EU EX2 certification.
[3] S — Max. operating pressure 10 bar in combination with EU EX2 certification.
[4] AD7 ... AD12 — Measuring range max. 10 bar.
[5] PSI — Only in combination with pressure gauge AG.
[6] MPA — Only in combination with pressure gauge AG or RG.
[7] WP, WPM — Only with connecting plate AGA, AGB, AGC, AGD, AGE, AQK, AQN, AQP, AQR or AQS.
[8] UL1 — Not with supply voltage V110, V230.

Peripherals overview

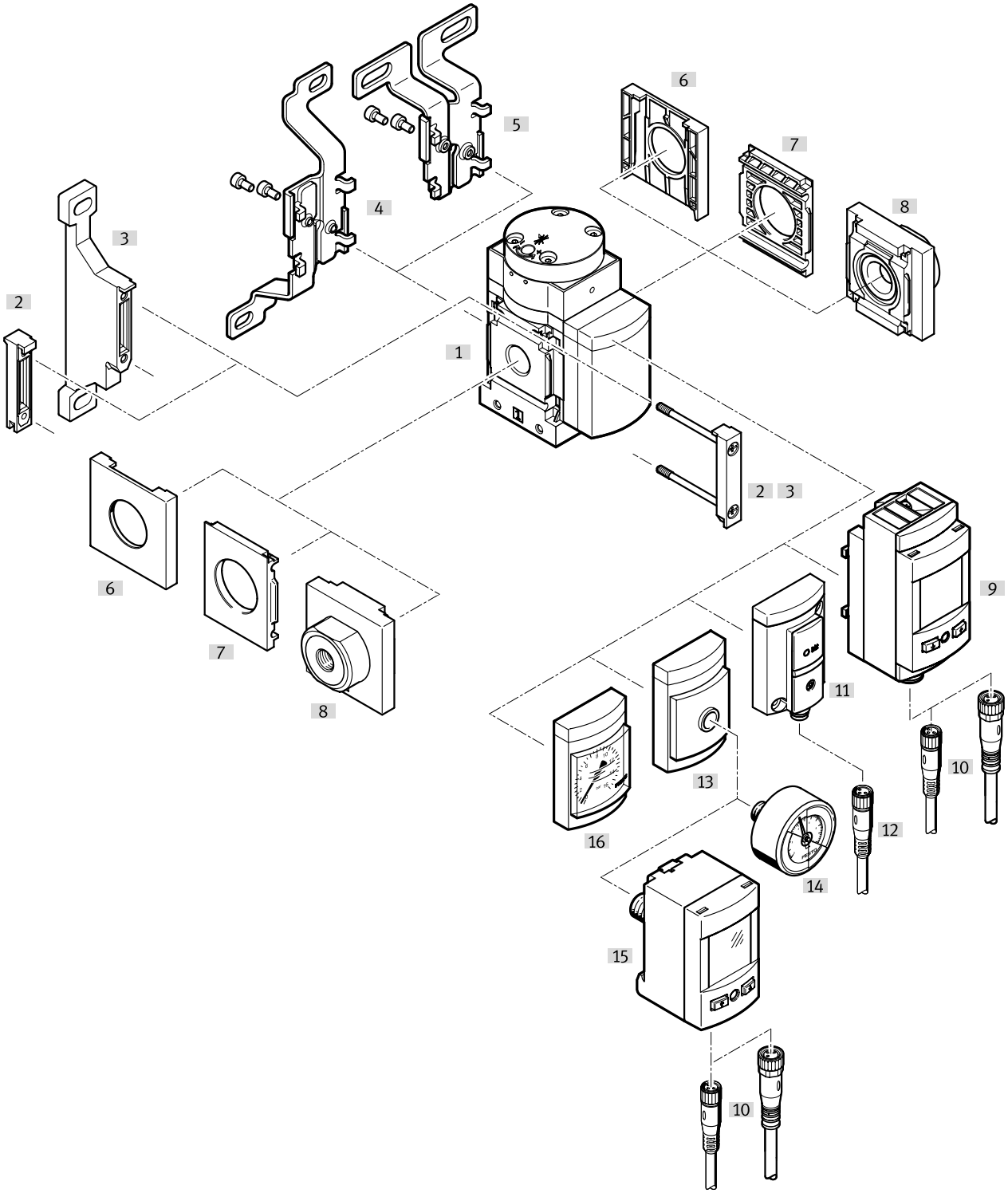

Note

Additional accessories:

- Module connector for combination with size MS4/MS6 or size MS9
  ➔ Internet: amv, rmv, armv
- Adapter for mounting on profiles
  ➔ Internet: ipm-80, ipm-40-80, ipm-80-80

Peripherals overview

Mounting attachments and accessories			
		Order code	→ Page/Internet
[1]	Soft-start valve	MS4/6-DL	38
Can be ordered via the modular product system			
[3]	Mounting bracket	[WP]	44
	Mounting bracket (not shown)	[WPM]	
[4]	Mounting bracket	[WB]	
[5]	Mounting bracket	[WBM]	
[8]	Connecting plate SET[1]	[AG...]	
	Connecting plate SET[1]	[AQ...]	
[9]	Pressure sensor SPAU with LCD display	[AD11], [AD12]	
[11]	Pressure sensor SDE5 with status indicator	[AD7], [AD8], [AD9], [AD10]	
[13]	Adapter for EN pressure gauge 1/8, 1/4	[A8], [A4]	
[16]	MS pressure gauge	[AG], [RG]	
Can be ordered as accessories			
[2]	Module connector	MS4/6-MV	ms4-mv, ms6-mv
[3]	Mounting bracket	MS4/6-WP	ms4-wp, ms6-wp
	Mounting bracket (not shown)	MS4/6-WPB/WPE/WPM	ms4-wp, ms6-wp
[4]	Mounting bracket	MS4/6-WB	ms4-wb, ms6-wb
[5]	Mounting bracket	MS4-WBM	ms4-wbm
[6]	Cover cap	MS4/6-END	ms4-end, ms6-end
[7]	Mounting plate[2]	MS4/6-AEND	ms4-aend, ms6-aend
[8]	Connecting plate SET[2]	MS4/6-AG...	ms4-ag, ms6-ag
[10]	Connecting cable	NEBU-M8...-LE4, NEBU-M12...-LE4	103
[12]	Connecting cable	NEBU-M8...-LE3	103
[14]	Pressure gauge	MA	103
[15]	Pressure sensor	SPAU-...-T	102

1) Module connector [2] is included in the scope of delivery.
2) Module connector MS4/6-MV [2] or mounting bracket MS4/6-WP, WPB, WPE, WPM [3] is required for mounting.

Type codes

001	Series	
MS	MS series	

002	Size	
4	Grid dimension 40 mm	

003	Function	
DL	Soft-start valve, pneumatic	

004	Pneumatic connection	
1/8	Female thread G1/8	
1/4	Female thread G1/4	
AGA	Sub-base G1/8	
AGB	Sub-base G1/4	
AGC	Sub-base G3/8	

005	Pressure gauge alternatives	
	None	
A4	Adapter for EN pressure gauge 1/4, without pressure gauge	
A8	Adapter for EN pressure gauge 1/8, without pressure gauge	
A8M	Adapter for EN pressure gauge 1/8, with precision pressure gauge	
AD7	Pressure sensor with switching display, M8 plug, threshold value comparator, PNP, N/O	
AD8	Pressure sensor with switching display, M8 plug, threshold value comparator, PNP, N/C	
AD9	Pressure sensor with switching display, M8 plug, window comparator, PNP, N/O	
AD10	Pressure sensor with operational status indicator, M8 plug, window comparator, PNP, N/C	
AD11	Pressure sensor with LCD display, M12 plug, 4-pin, IO-Link®, PNP, NPN, 0...10 V, 1...5 V, 4...20 mA	
AD12	Pressure sensor with LCD display, M8 plug, 4-pin, IO-Link®, PNP, NPN, 0...10 V, 1...5 V, 4...20 mA	
AG	MS pressure gauge	
RG	Integrated pressure gauge, red/green scale	

006	Alternative pressure gauge scale	
	MS pressure gauge	
PSI	psi	
MPA	MPa	

007	Type of mounting	
	Without mounting bracket	
WP	Mounting bracket basic design	
WPM	Mounting bracket for hooking in service unit components	
WB	Mounting centrally at rear (wall mounting top and bottom), connecting plates not required	
WBM	Mounting centrally at rear (wall mounting top), connecting plates not required	

008	EU certification	
	None	
EX2	II 3GD to EU Explosion Protection Directive (ATEX)	
EX4	II 2GD	

009	UL certification	
	None	
UL1	cULus ordinary location for Canada and USA	

010	Flow direction	
	Flow direction from left to right	
Z	Flow direction from right to left	

Type codes

001	Series	
MS	MS series	

002	Size	
6	Grid dimension 62 mm	

003	Function	
DL	Soft-start valve, pneumatic	

004	Pneumatic connection	
1/4	Female thread G1/4	
3/8	Female thread G3/8	
1/2	Female thread G1/2	
AGB	Sub-base G1/4	
AGC	Sub-base G3/8	
AGD	Sub-base G1/2	
AGE	Sub-base G3/4	

005	Pressure gauge alternatives	
	None	
A4	Adapter for EN pressure gauge 1/4, without pressure gauge	
A8	Adapter for EN pressure gauge 1/8, without pressure gauge	
AD7	Pressure sensor with switching display, M8 plug, threshold value comparator, PNP, N/O	
AD8	Pressure sensor with switching display, M8 plug, threshold value comparator, PNP, N/C	
AD9	Pressure sensor with switching display, M8 plug, window comparator, PNP, N/O	
AD10	Pressure sensor with operational status indicator, M8 plug, window comparator, PNP, N/C	
AD11	Pressure sensor with LCD display, M12 plug, 4-pin, IO-Link®, PNP, NPN, 0...10 V, 1...5 V, 4...20 mA	
AD12	Pressure sensor with LCD display, M8 plug, 4-pin, IO-Link®, PNP, NPN, 0...10 V, 1...5 V, 4...20 mA	
AG	MS pressure gauge	
RG	Integrated pressure gauge, red/green scale	

006	Alternative pressure gauge scale	
	MS pressure gauge	
PSI	psi	
MPA	MPa	

007	Type of mounting	
	Without mounting bracket	
WP	Mounting bracket basic design	
WPM	Mounting bracket for hooking in service unit components	
WB	Mounting centrally at rear (wall mounting top and bottom), connecting plates not required	

008	EU certification	
	None	
EX2	II 3GD to EU Explosion Protection Directive (ATEX)	
EX4	II 2GD	

009	UL certification	
	None	
UL1	cULus ordinary location for Canada and USA	

010	Flow direction	
	Flow direction from left to right	
Z	Flow direction from right to left	

Datasheet

Function

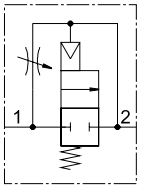

Flow rate
1000 ... 6450 l/min

Temperature range
–10 ... +60 °C

Operating pressure
4 ... 18 bar

The duration of the pressure build-up is set using the restrictor attached to the valve cap.
The output pressure p2 rises slowly in accordance with the restrictor setting. The main seat opens when the switch-through pressure is reached.

- Pneumatically actuated soft-start valve for slowly pressurising and exhausting pneumatic systems (for use with on/off valves EM1 and EE)
- The drives move slowly and reliably into the initial position
- Sudden and erratic movements are avoided
- Main seat opening at approx. 50% of operating pressure
- Adjustable switching time delay
- Optional pressure sensor
- Optional device variant EX4 for use in potentially explosive areas in zones 1, 2, 21 and 22

General technical data

Size		MS4	MS6
Pneumatic connection 1, 2			
Female thread		G1/8 or G1/4	G1/4, G3/8 or G1/2
Connecting plate	[AG...]	G1/8, G1/4 or G3/8	G1/4, G3/8, G1/2 or G3/4
	[AQ...]	1/8 NPT, 1/4 NPT or 3/8 NPT	1/4 NPT, 3/8 NPT, 1/2 NPT or 3/4 NPT
Design		Piston seat	
Type of mounting		With accessories	
		In-line installation	
Mounting position		Any[1)]	
Pressure indication		Via pressure sensor for indicating the output pressure and electrical output via LCD display	
		Via pressure sensor for indicating the status of the output pressure and the electrical output	
		Via pressure gauge for displaying the output pressure	
		Via pressure gauge with red/green scale for indicating the output pressure	
		Prepared for G1/8	
		Prepared for G1/4	
Valve function		2/2-way valve	
Exhaust function		Can be throttled	
Reset method		Mechanical spring	
Type of actuation		Direct	
Pilot air supply		External	
Flow direction		Not reversible	

1) The soft-start valve must be mounted vertically when combined with a pressure sensor as condensate must not collect in the pressure sensor.

Note: This product conforms to ISO 1179-1 and ISO 228-1.

Datasheet

Characteristic flow rate values					
Size	MS4		MS6		
Pneumatic connection 1, 2	G1/8	G1/4	G1/4	G3/8	G1/2
Standard nominal flow rate qnN[1] [l/min]					
In main flow direction 1 ➔ 2	1000	2000	2800	5050	6450
In relief direction 2 ➔ 1	1000	2000	2800	5050	6400
C value [l/s*min]					
In main flow direction 1 ➔ 2	4.6	9.6	11.22	21.05	28.97
b value					
In main flow direction 1 ➔ 2	0.5	0.45	0.54	0.48	0.39

1) Measured at p1 = 6 bar and p2 = 5 bar, Δp = 1 bar.

Operating and environmental conditions				
Size	MS4		MS6	
Soft-start valve	Without pressure sensor	With pressure sensor	Without pressure sensor	With pressure sensor
Operating pressure [bar]	4 ... 14 (4 ... 10)[1]	4 ... 10	4 ... 18 (4 ... 10)[1]	4 ... 10
Operating medium	Compressed air to ISO 8573-1:2010 [7:4:4]			
	Inert gases			
Note on the operating/pilot medium	Lubricated operation possible (in which case lubricated operation will always be required)			
Ambient temperature [°C]	–10 ... +60	0 ... +50	–10 ... +60	0 ... +50
Temperature of medium [°C]	–10 ... +60	0 ... +50	–10 ... +60	0 ... +50
Corrosion resistance class CRC[2]	2			
Food-safe[3]	See supplementary material information			
UL certification[3]	c UL us - Recognized (OL)			

1) Value in brackets applies to MS4/MS6-DL with UL certification.
2) More information www.festo.com/x/topic/crc
3) More information: www.festo.com/catalogue/ms-dl ➔ Support/Downloads.

ATEX	
EU certification	EX4
ATEX category for gas	II 2G
Type of (ignition) protection for gas	Ex h IIC T6 Gb X
ATEX category for dust	II 2D
Type of (ignition) protection for dust	Ex h IIIC T60°C Db X
Explosion ambient temperature	–10°C ≤ Ta ≤ +60 °C
Explosion protection certification outside the EU	EPL Db (GB) EPL Gb (GB)
CE marking (see declaration of conformity)[1]	To EU Explosion Protection Directive (ATEX)
UKCA marking (see declaration of conformity)[1]	To UK EX instructions

1) More information: www.festo.com/catalogue/ms-dl ➔ Support/Downloads.

Datasheet

Weight [g]		
Size	MS4	MS6
Soft-start valve	213	650

Materials

Sectional view

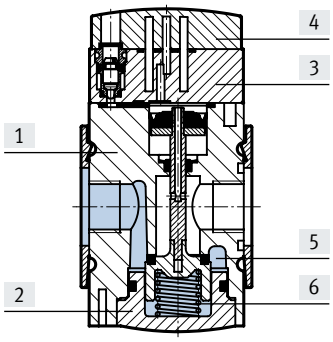

Soft-start valve		
[1]	Housing	Die-cast aluminium
[2]	Floor	PET
[3]	End cover	PA
[4]	Plate	PA
[5]	Seat	Aluminium
[6]	Springs	Spring steel
–	Seals	NBR
Note on materials		RoHS-compliant
LABS (PWIS) conformity		VDMA24364-B1/B2-L

Switching point – Pressure p as a function of time t

MS4

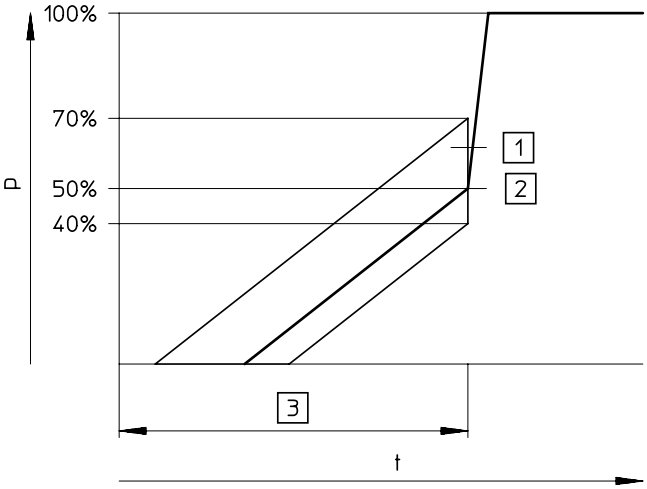

MS6

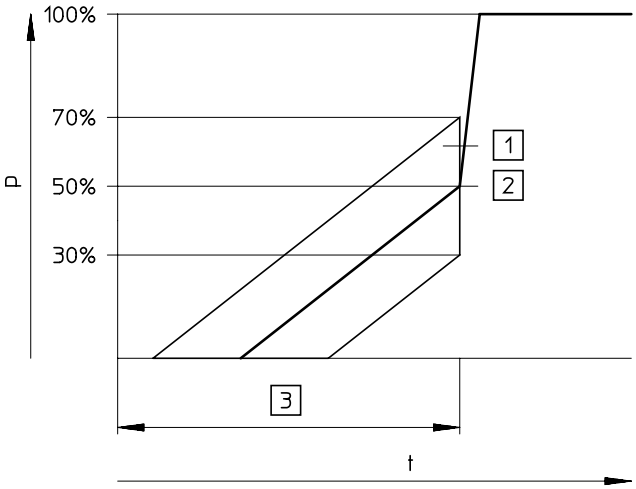

[1] Tolerance range
[2] Switching point
[3] Filling time is adjustable via a restrictor

Note

The +20%/–10% switching point tolerance refers to the operating pressure p1. Example: A switching point from 1.6 bar to 2.8 bar is permissible at an operating pressure of 4 bar.

Note

The +20%/–20% switching point tolerance refers to the operating pressure p1. Example: A switching point from 1.2 bar to 2.8 bar is permissible at an operating pressure of 4 bar.

Datasheet

Dimensions – Basic version Download CAD data ➔ www.festo.com

With female thread, with cover plate

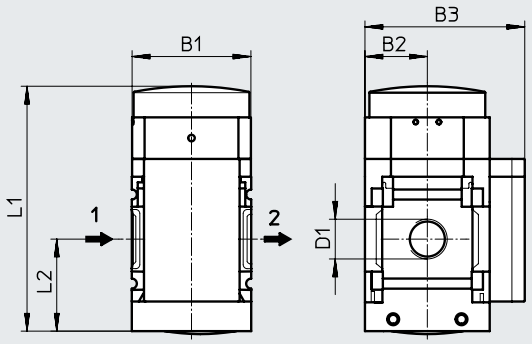

➔ Flow direction

Type	B1	B2	B3	D1	L1	L2
MS4-...						
MS4-DL-1/8	40	21	54	G1/8	83.2	31.5
MS4-DL-1/4				G1/4		
MS6-...						
MS6-DL-1/4	62	31	76	G1/4	108	46
MS6-DL-3/8				G3/8		
MS6-DL-1/2				G1/2		

Note: This product conforms to ISO 1179-1 and ISO 228-1.

Dimensions – Pressure gauges/pressure gauge alternatives Download CAD data ➔ www.festo.com

[AG] Integrated MS pressure gauge with standard scale

[RG] Integrated MS pressure gauge with red/green scale

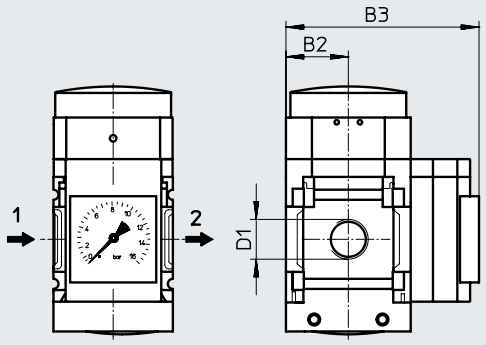

➔ Flow direction

[A8] Adapter for EN pressure gauge 1/8, without pressure gauge

[A4] Adapter for EN pressure gauge 1/4, without pressure gauge

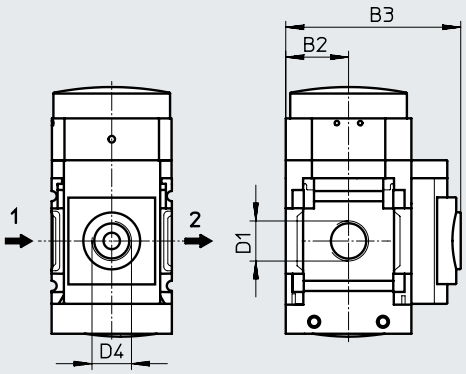

➔ Flow direction

Type	B2	B3	D4
MS4-...			
MS4-...-AG	21	57	–
MS4-...-RG	21	58.5	–
MS4-...-A8	21	58.5	G1/8
MS4-...-A4	21	58.5	G1/4
MS6-...			
MS6-...-AG	31	77	–
MS6-...-RG	31	78.5	–
MS6-...-A8	31	78.5	G1/8
MS6-...-A4	31	78.5	G1/4

Datasheet

Dimensions – Pressure sensor

Download CAD data ➔ www.festo.com

[AD7], [AD8], [AD9], [AD10] Pressure sensor with status indicator

Datasheets ➔ Internet: sde5

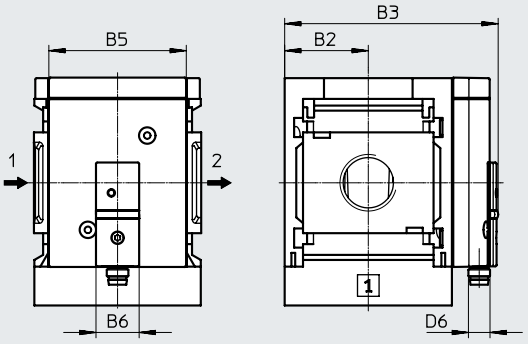

[AD7]:
SDE5-D10-O-...-P-M8 with 1x 3-pin M8 plug, threshold value comparator, 1 switching output PNP, N/O contact

[AD8]:
SDE5-D10-C-...-P-M8 with 1x 3-pin M8 plug, threshold value comparator, 1 switching output PNP, N/C contact

[AD9]:
SDE5-D10-O3-...-P-M8 with 1x 3-pin M8 plug, window comparator, 1 switching output PNP, N/O contact

[AD10]:
SDE5-D10-C3-...-P-M8 with 1x 3-pin M8 plug, window comparator, 1 switching output PNP, N/C contact

[AD11], [AD12] Pressure sensor with LCD display

Datasheets ➔ Internet: spau

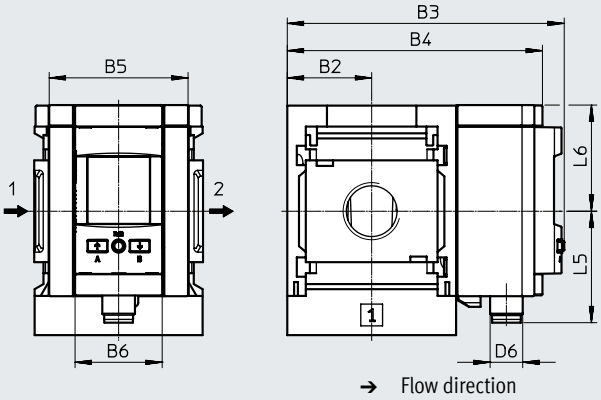

[AD11]:
SPAU-P10R-MS...-L-PNLK-M12D with 1x 4-pin M12 plug, A-coded, switching output 2x PNP or 2x NPN switchable and 0 ... 10 V, 1 ... 5 V, 4 ... 20 mA analogue

[AD12]:
SPAU-P10R-MS...-L-PNLK-M8D with 1x 4-pin M8 plug, A-coded, switching output 2x PNP or 2x NPN switchable and 0 ... 10 V, 1 ... 5 V, 4 ... 20 mA analogue

Type	B2	B3	B4	B5	B6	D6	L5	L6
MS4-...								
MS4-...-AD7, AD8, AD9, AD10	21	59.1	–	~32	16	M8x1	–	–
MS4-...-AD11	21	81.2	73.3	32	32	M12x1	41.2	39
MS4-...-AD12						M8x1	37.9	
MS6-...								
MS6-...-AD7, AD8, AD9, AD10	31	79.1	–	~51	16	M8x1	–	–
MS6-...-AD11	31	101.8	93.7	51	32	M12x1	41.2	39
MS6-...-AD12						M8x1	37.9	

Datasheet

★ Core Range

Ordering data

Size	Connection	Flow direction	Part no.	Type
MS4	G1/4	From left to right	★ **529531**	**MS4-DL-1/4**
MS6	G1/2	From left to right	★ **529817**	**MS6-DL-1/2**

Ordering data

Size	Connection	Flow direction	Part no.	Type
MS4	G1/8	From left to right	**529533**	**MS4-DL-1/8**
	G1/4	From right to left	**529532**	**MS4-DL-1/4-Z**
MS6	G1/4	From left to right	**529819**	**MS6-DL-1/4**
	G3/8	From left to right	**529821**	**MS6-DL-3/8**
	G1/2	From right to left	**529818**	**MS6-DL-1/2-Z**

Ordering data – Modular product system

Ordering table Grid dimension [mm]	40	62	Conditions	Code		Enter code
Module no.	**527711**	**527684**				
Series	Standard			**MS**		MS
Size	4	6		**...**		
Function	Soft-start valve, pneumatic			**-DL**		-DL
Pneumatic connection	Female thread G1/8	–	[1]	**-1/8**		
	Female thread G1/4	Female thread G1/4	[1]	**-1/4**		
	–	Female thread G3/8	[1]	**-3/8**		
	–	Female thread G1/2	[1]	**-1/2**		
	Connecting plate G1/8	–		**-AGA**		
	Connecting plate G1/4	Connecting plate G1/4		**-AGB**		
	Connecting plate G3/8	Connecting plate G3/8		**-AGC**		
	–	Connecting plate G1/2		**-AGD**		
	–	Connecting plate G3/4		**-AGE**		
	Connecting plate 1/8 NPT	–	[1]	**-AQK**		
	Connecting plate 1/4 NPT	Connecting plate 1/4 NPT	[1]	**-AQN**		
	Connecting plate 3/8 NPT	Connecting plate 3/8 NPT	[1]	**-AQP**		
	–	Connecting plate 1/2 NPT	[1]	**-AQR**		
	–	Connecting plate 3/4 NPT	[1]	**-AQS**		
Pressure gauge/pressure gauge alternatives	None					
	MS pressure gauge, bar			**-AG**		
	Adapter for EN pressure gauge 1/8, without pressure gauge			**-A8**		
	Adapter for EN pressure gauge 1/4, without pressure gauge			**-A4**		
	Integrated pressure gauge, red/green scale			**-RG**		
	Pressure sensor with status indicator, plug M8, threshold value comparator, PNP, N/O contact		[1] [2]	**-AD7**		
	Pressure sensor with status indicator, plug M8, threshold value comparator, PNP, N/C contact		[1] [2]	**-AD8**		
	Pressure sensor with status indicator, plug M8, window comparator, PNP, N/O contact		[1] [2]	**-AD9**		
	Pressure sensor with status indicator, plug M8, window comparator, PNP, N/C contact		[1] [2]	**-AD10**		
	Pressure sensor with LCD display, plug M12, 4-pin, IO-Link®, PNP, NPN, 0... 10 V, 1 ... 5 V, 4 ... 20 mA		[1] [2]	**-AD11**		
	Pressure sensor with LCD display, plug M8, 4-pin, IO-Link®, PNP, NPN, 0... 10 V, 1 ... 5 V, 4 ... 20 mA		[1] [2]	**-AD12**		
Alternative pressure gauge scale	None					
	psi		[3]	**-PSI**		
	MPa		[4]	**-MPA**		

[1] 1/8; 1/4; 3/8; 1/2, AQK, AQN, AQP, AQR, AQS, AD7 ... AD12, WPM — Not with EU EX4 certification.
[2] AD7 ... AD12 — Measuring range max. 10 bar.
[3] PSI — Only in combination with pressure gauge AG.
[4] MPA — Only in combination with pressure gauge AG or RG.

Ordering data – Modular product system

Ordering table						
Grid dimension [mm]	40	62	Conditions	Code		Enter code
Type of mounting	Without mounting bracket					
	Mounting bracket standard design		[5]	**-WP**		
	Mounting bracket for hooking in service unit components		[1] [5]	**-WPM**		
	Mounting bracket centrally at rear (wall mounting top and bottom), connecting plates not required			**-WB**		
	Mounting bracket centrally at rear (wall mounting top), connecting plates not required	–		**-WBM**		
EU certification	None					
	II 2GD to EU Explosion Protection Directive (ATEX)			**-EX4**		
UL certification	None					
	cULus, ordinary location for Canada and USA			**-UL1**		
Flow direction	Flow direction from left to right					
	Flow direction from right to left			**-Z**		

[1] 1/8; 1/4; 3/8; 1/2, AQK, AQN, AQP, AQR, AQS, AD7 ... AD12, WPM — Not with EU EX4 certification.

[5] WP, WPM — Only with connecting plate AGA, AGB, AGC, AGD, AGE, AQK, AQN, AQP, AQR or AQS.

Peripherals overview

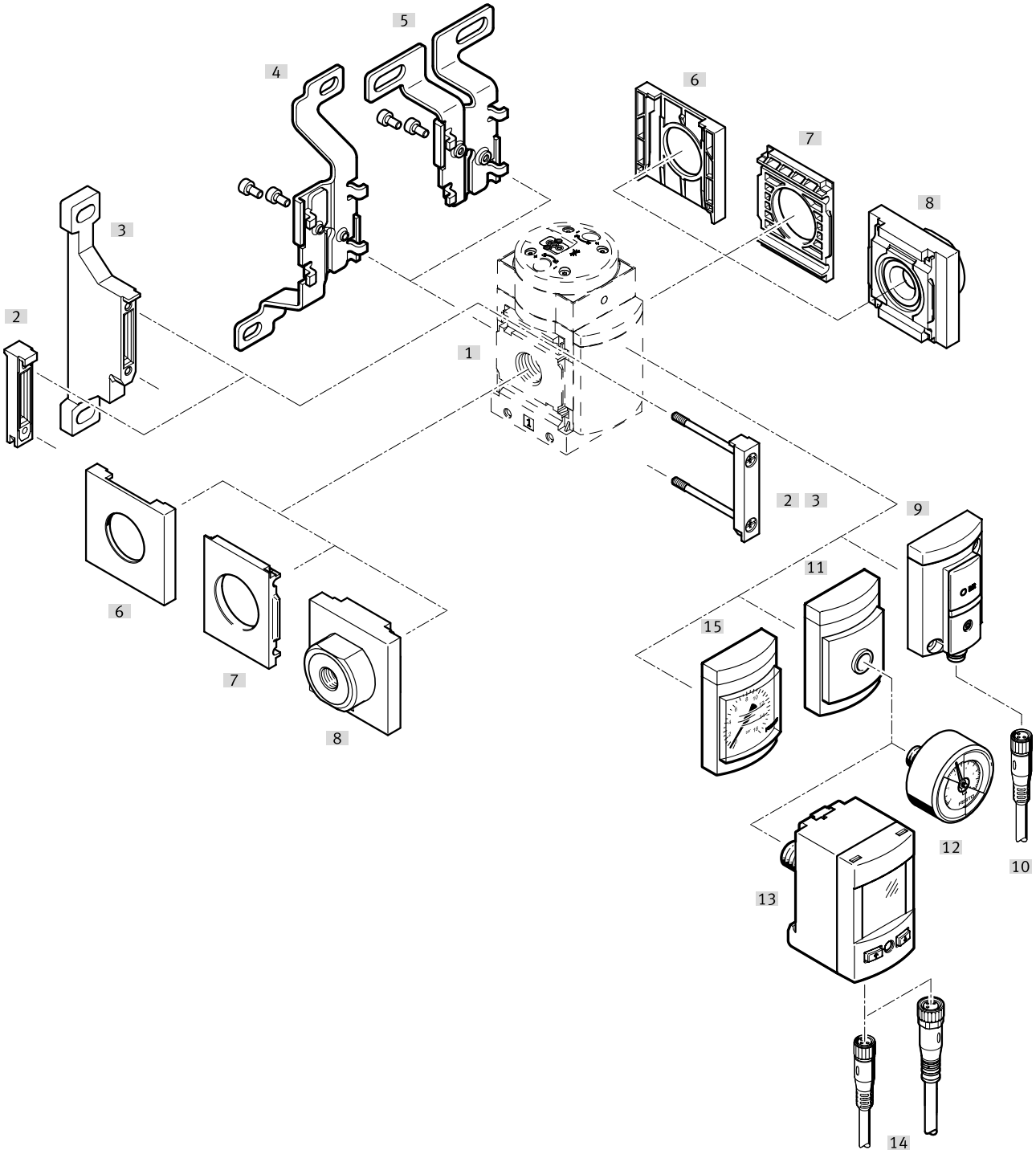

Note

Additional accessories:

- Module connector for combination with size MS4/MS6 or size MS9
  ➔ Internet: amv, rmv, armv
- Adapter for mounting on profiles
  ➔ Internet: ipm-80, ipm-40-80, ipm-80-80

Peripherals overview

Supply voltage
[V24], [10V24], [V110], [V230]

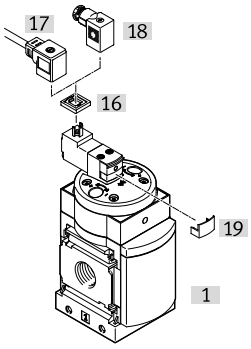

Supply voltage
[10V24P

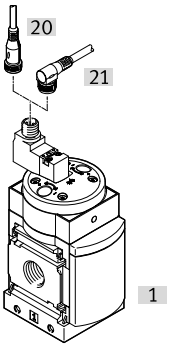

Mounting attachments and accessories			
		Order code	→ Page/Internet
[1]	Soft-start valve	MS4/6-DE	50
Can be ordered via the modular product system			
[3]	Mounting bracket	[WP]	56
	Mounting bracket (not shown)	[WPM]	
[4]	Mounting bracket	[WB]	
[5]	Mounting bracket	[WBM]	
[8]	Connecting plate SET[1)]	[AG...]	
	Connecting plate SET[1)]	[AQ...]	
[9]	Pressure sensor SDE5 with status indicator	[AD7], [AD8], [AD9], [AD10]	
[11]	Adapter for EN pressure gauge 1/8, 1/4	[A8], [A4]	
[15]	MS pressure gauge	[AG], [RG]	
Can be ordered as accessories			
[2]	Module connector	MS4/6-MV	ms4-mv, ms6-mv
[3]	Mounting bracket	MS4/6-WP	ms4-wp, ms6-wp
	Mounting bracket (not shown)	MS4/6-WPB/WPE/WPM	ms4-wp, ms6-wp
[4]	Mounting bracket	MS4/6-WB	ms4-wb, ms6-wb
[5]	Mounting bracket	MS4-WBM	ms4-wbm
[6]	Cover cap	MS4/6-END	ms4-end, ms6-end
[7]	Mounting plate[2)]	MS4/6-AEND	ms4-aend, ms6-aend
[8]	Connecting plate SET[2)]	MS4/6-AG...	ms4-ag, ms6-ag
[13]	Pressure sensor	SPAU-...-T	102
[12]	Pressure gauge	MA	103
[10]	Connecting cable	NEBU-M8...-LE3	103
[14]	Connecting cable	NEBU-M8...-LE4, NEBU-M12...-LE4	103
[16]	Illuminating seal	MEB-LD	102
[17]	Plug socket with cable	KMEB	102
[18]	Plug socket[3)]	MSSD-EB	102
[19]	Locking clip	CPV18-HV	102
[20]	Connecting cable	NEBU-M12G5	103
[21]	Connecting cable	NEBU-M12W5	103

1) Module connector [2] is included in the scope of delivery.
2) Module connector MS4/6-MV [2] or mounting bracket MS4/6-WP, WPB, WPE, WPM [3] is required for mounting.
3) For soft-start valve MS...-V24-...-EX2, the plug socket is included in the scope of delivery.

Type codes

001	Series	
MS4	MS series, size 4	

002	Size	
4	Grid dimension 40 mm	

003	Function	
DE	Soft-start valve, electric	

004	Pneumatic connection	
1/8	Female thread G1/8	
1/4	Female thread G1/4	
AGA	Sub-base G1/8	
AGB	Sub-base G1/4	
AGC	Sub-base G3/8	

005	Supply voltage	
10V24	24 V DC, 10 bar, connection pattern to EN 175301	
10V24P	24 V DC, 10 bar, M12 plug socket adapter (connection pattern to EN 60947-5-2)	
V110	110 V AC (connection pattern to EN 175301)	
V230	230 V AC (connection pattern to EN 175301)	
V24	24 V DC (connection pattern to EN 175301)	

006	Pressure gauge alternatives	
	None	
A4	Adapter for EN pressure gauge 1/4, without pressure gauge	
A8	Adapter for EN pressure gauge 1/8, without pressure gauge	
AD7	Pressure sensor with switching display, M8 plug, threshold value comparator, PNP, N/O	
AD8	Pressure sensor with switching display, M8 plug, threshold value comparator, PNP, N/C	
AD9	Pressure sensor with switching display, M8 plug, window comparator, PNP, N/O	
AD10	Pressure sensor with operational status indicator, M8 plug, window comparator, PNP, N/C	
AG	MS pressure gauge	
RG	Integrated pressure gauge, red/green scale	

007	Alternative pressure gauge scale	
	MS pressure gauge	
PSI	psi	
MPA	MPa	

008	Type of mounting	
	Without mounting bracket	
WP	Mounting bracket basic design	
WPM	Mounting bracket for hooking in service unit components	
WB	Mounting centrally at rear (wall mounting top and bottom), connecting plates not required	
WBM	Mounting centrally at rear (wall mounting top), connecting plates not required	

009	EU certification	
	None	
EX2	II 3GD to EU Explosion Protection Directive (ATEX)	

010	UL certification	
	None	
UL1	cULus ordinary location for Canada and USA	

011	Flow direction	
	Flow direction from left to right	
Z	Flow direction from right to left	

Type codes

001	Series	
MS	MS series	

002	Size	
6	Grid dimension 62 mm	

003	Function	
DE	Soft-start valve, electric	

004	Pneumatic connection	
1/4	Female thread G1/4	
3/8	Female thread G3/8	
1/2	Female thread G1/2	
AGB	Sub-base G1/4	
AGC	Sub-base G3/8	
AGD	Sub-base G1/2	
AGE	Sub-base G3/4	

005	Supply voltage	
10V24	24 V DC, 10 bar, connection pattern to EN 175301	
10V24P	24 V DC, 10 bar, M12 plug socket adapter (connection pattern to EN 60947-5-2)	
V110	110 V AC (connection pattern to EN 175301)	
V230	230 V AC (connection pattern to EN 175301)	
V24	24 V DC (connection pattern to EN 175301)	

006	Pressure gauge alternatives	
	None	
A4	Adapter for EN pressure gauge 1/4, without pressure gauge	
AD7	Pressure sensor with switching display, M8 plug, threshold value comparator, PNP, N/O	
AD8	Pressure sensor with switching display, M8 plug, threshold value comparator, PNP, N/C	
AD9	Pressure sensor with switching display, M8 plug, window comparator, PNP, N/O	
AD10	Pressure sensor with operational status indicator, M8 plug, window comparator, PNP, N/C	
AG	MS pressure gauge	
RG	Integrated pressure gauge, red/green scale	

007	Alternative pressure gauge scale	
	MS pressure gauge	
PSI	psi	
MPA	MPa	

008	Type of mounting	
	Without mounting bracket	
WP	Mounting bracket basic design	
WPM	Mounting bracket for hooking in service unit components	
WB	Mounting centrally at rear (wall mounting top and bottom), connecting plates not required	

009	EU certification	
	None	
EX2	II 3GD to EU Explosion Protection Directive (ATEX)	

010	UL certification	
	None	
UL1	cULus ordinary location for Canada and USA	

011	Flow direction	
	Flow direction from left to right	
Z	Flow direction from right to left	

Datasheet

Function

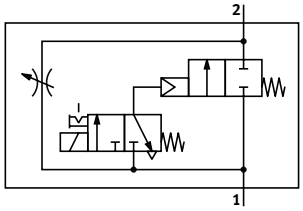

Flow rate
1000 ... 6450 l/min

Temperature range
–10 ... +60 °C

Operating pressure
4 ... 18 bar

www.festo.com

The duration of the pressure build-up is set using the restrictor attached to the valve cap.
The output pressure p2 rises slowly in accordance with the restrictor setting. While the solenoid valve is not actuated, only the flow rate of the flow control valve is available. The main seat is only opened when the solenoid valve is energised.

When the solenoid valve is switched off, the main seat is closed and only the flow rate of the flow control valve is available.
When exhausting a system, the solenoid valve should remain switched on; this increases the volume flow from 2 to 1 and shortens the exhaust time. For this, a quick exhaust valve must be connected upstream.

- Electrically actuated soft-start valve for slowly pressurising and exhausting pneumatic installations
- The drives move slowly and reliably into the initial position
- Sudden and erratic movements are avoided
- With solenoid coil, without plug socket
- Choice of three voltage ranges
- The switching pressure can be precisely controlled with a solenoid valve
- Adjustable switching time delay
- Manual override: non-detenting and detenting (variant 10V24 non-detenting only)
- Solenoid actuator can be repositioned by 180°
- Optional pressure sensor
- Optional device variant EX2 for use in potentially explosive areas in zones 2 and 22

General technical data

Size		MS4	MS6
Pneumatic connection 1, 2			
Female thread		G1/8 or G1/4	G1/4, G3/8 or G1/2
Connecting plate	[AG...]	G1/8, G1/4 or G3/8	G1/4, G3/8, G1/2 or G3/4
	[AQ...]	1/8 NPT, 1/4 NPT or 3/8 NPT	1/4 NPT, 3/8 NPT, 1/2 NPT or 3/4 NPT
Design		Piston seat	
Type of mounting		With accessories	
		In-line installation	
Mounting position		Any[1)]	
Pressure indication		Via pressure sensor for indicating the output pressure and electrical output via LCD display	
		Via pressure sensor for indicating the status of the output pressure and the electrical output	
		Via pressure gauge for displaying the output pressure	
		Via pressure gauge with red/green scale for indicating the output pressure	
		Prepared for G1/8	–
		Prepared for G1/4	
Valve function		2/2-way valve	
Manual override			
With supply voltage	[10V24]	Non-detenting	
	[V24], [10V24P], [V110], [V230]	Non-detenting/detenting	
Type of mounting		Electrical	
Reset method		Mechanical spring	
Signal status display		With accessories	
Switching status indication		With accessories	
Type of actuation		Piloted	
Pilot air supply		Internal	
Flow direction		Not reversible	

1) The soft-start valve must be mounted vertically when combined with a pressure sensor as condensate must not collect in the pressure sensor.

Note: This product conforms to ISO 1179-1 and ISO 228-1.

Datasheet

Electrical data		
Characteristic coil data		
With supply voltage	[V24]	24 V DC: 1.5 W; permissible voltage fluctuations –25%/+10%
	[10V24], [10V24P]	24 V DC: 1.8 W; permissible voltage fluctuations –15%/+10%
	[V110]	110 V AC: 50/60 Hz; pick-up power 3.0 VA; holding power 2.4 VA; permissible voltage fluctuations ±10%
	[V230]	230 V AC: 50/60 Hz; pick-up power 3.0 VA; holding power 2.4 VA; permissible voltage fluctuations –14%/+10%
Electrical connection		
With supply voltage	[V24], [10V24], [V110], [V230]	Plug, square design to EN 175301-803, type C
	[10V24P]	M12x1 to IEC 61076-2-101 M12x1 to ISO 20401 in line with EN 61076-2-101
Degree of protection for solenoid coil		IP65
Duty cycle [%]		100

Characteristic flow rate values					
Size	MS4		MS6		
Pneumatic connection 1, 2	G1/8	G1/4	G1/4	G3/8	G1/2
Standard nominal flow rate qnN[1] [l/min]					
In main flow direction 1 ➔ 2	1000	2000	2700	5050	6450
In relief direction 2 ➔ 1[2]	1000	2000	2600	5050	6400
C value [l/s*min]					
In main flow direction 1 ➔ 2	4.6	9.6	11.22	21.05	28.97
b value					
In main flow direction 1 ➔ 2	0.5	0.45	0.54	0.48	0.39

1) Measured at p1 = 6 bar and p2 = 5 bar, Δp = 1 bar.
2) With energised solenoid valve.

Operating and environmental conditions						
Size	MS4			MS6		
Soft-start valve	Without pressure sensor		With pressure sensor	Without pressure sensor		With pressure sensor
Supply voltage	[V24], [V110], [V230]	[10V24], [10V24P]		[V24], [V110], [V230]	[10V24], [10V24P]	
Operating pressure [bar]	4 ... 14 (4 ... 10)[1]	4 ... 10	4 ... 10	4 ... 18 (4 ... 10)[1]	4 ... 10	4 ... 10
Operating medium	Compressed air to ISO 8573-1:2010 [7:4:4]					
	Inert gases					
Note on the operating/pilot medium	Lubricated operation possible (in which case lubricated operation will always be required)					
Ambient temperature [°C]	–10 ... +60	–10 ... +50	0 ... +50	–10 ... +60	–10 ... +50	0 ... +50
Temperature of medium [°C]	–10 ... +60	–10 ... +50	0 ... +50	–10 ... +60	–10 ... +50	0 ... +50
Corrosion resistance class CRC[2]	2					
Food-safe[3]	See supplementary material information (except for solenoid valve)					
UL certification[3]	c UL us - Recognized (OL)					
CE marking (see declaration of conformity)[3]	To EU EMC Directive					
	To EU Low Voltage Directive					
	To EU RoHS Directive					
UKCA marking (see declaration of conformity)[3]	To UK instructions for EMC					
	To UK RoHS instructions					
	To UK regulations for electrical equipment					
KC marking	–	–	KC EMC	–	–	KC EMC

1) Value in brackets applies to MS4/MS6-DE with UL certification.
2) More information www.festo.com/x/topic/crc
3) More information: www.festo.com/catalogue/ms-de ➔ Support/Downloads.

Datasheet

ATEX	
EU certification	[EX2]
ATEX category for gas	II 3G
Type of (ignition) protection for gas	Ex nA IIC T4 X Gc
ATEX category for dust	II 3D
Type of (ignition) protection for dust	Ex tc IIIC T105°C IP65 Dc X
Explosion ambient temperature	–10°C ≤ Ta ≤ +60 °C
CE marking (see declaration of conformity)[1]	To EU Explosion Protection Directive (ATEX)
UKCA marking (see declaration of conformity)[1]	To UK EX instructions
Explosion protection certification outside the EU	EPL Dc (GB)
	EPL Gc (GB)

1) More information: www.festo.com/catalogue/ms-de ➔ Support/Downloads.

Weight [g]		
Size	MS4	MS6
Soft-start valve	263	680

Materials

Sectional view

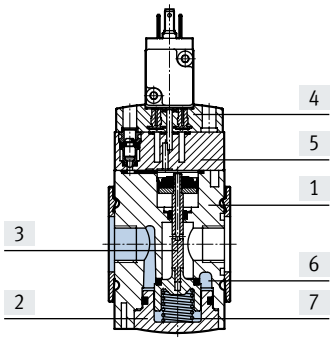

Soft-start valve		
[1]	Housing	Die-cast aluminium
[2]	Floor	PET
[3]	Valve tappet	Aluminium
[4]	End cover	PA
[5]	Plate	PA
[6]	Seat	Aluminium
[7]	Springs	Spring steel
–	Seals	NBR
Note on materials		RoHS-compliant
LABS (PWIS) conformity		VDMA24364-B1/B2-L

Manual override

[V24], [V110], [V230] Supply voltage

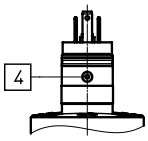

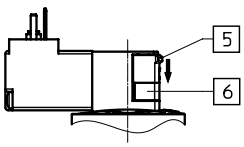

[4] Manual override: non-detenting (as supplied)
[5] Spool
[6] Cover

Note

For detenting manual override, remove the grey cover [6] and push the spool [5] downwards.

[10V24], [10V24P] Supply voltage

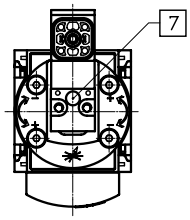

[7] Manual override: non-detenting and detenting ([10V24] non-detenting only)

Datasheet

Dimensions – Basic version Download CAD data ➔ www.festo.com

With female thread, with cover plate

[V24], [10V24], [V110], [V230] Supply voltage

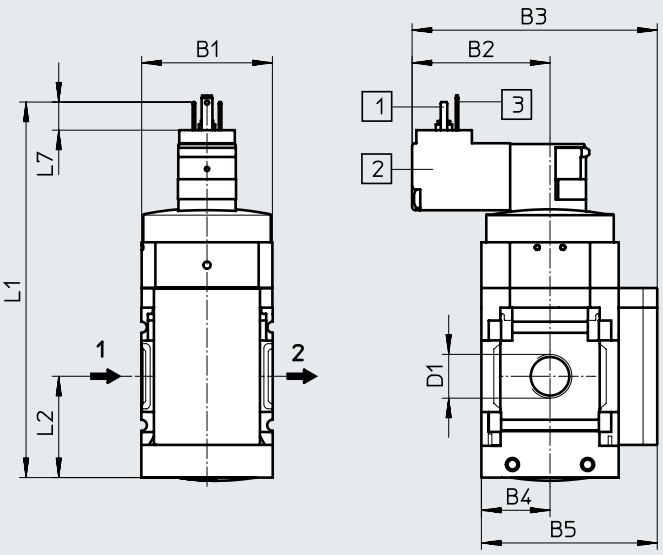

[10V24P] Supply voltage

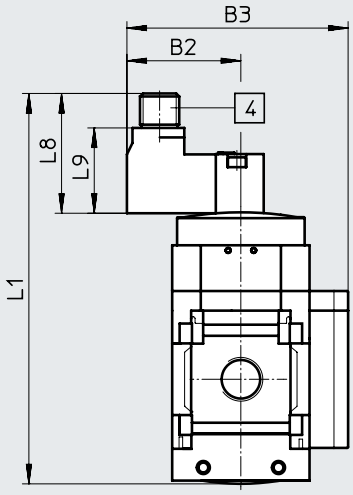

1 = not assigned
2 = not assigned
3 = com (–)
4 = Signal (+) solenoid
page 14

[1] Plug connection to EN 175301-803

[2] Solenoid actuator can be repositioned by 180°, i.e. solenoid points to the front

[3] PIN for solenoid actuators 110 V and 230 V only

[4] Electrical connection M12x1 to ISO 20401 conforming to EN 61076-2-101, 4-pin version for connecting cable NEBU-M12

➔ Flow direction

Type	B1	B2		B3		B4	B5	D1
		[V24] [V110] [V230]	[10V24] [10V24P]	[V24] [V110] [V230]	[10V24] [10V24P]			
MS4-...								
MS4-DE-1/8	40	42.2	34.9	75.2	67.9	21	54	G1/8
MS4-DE-1/4								G1/4
MS6-...								
MS6-DE-1/4	62	52	44	97	89	31	76	G1/4
MS6-DE-3/8								G3/8
MS6-DE-1/2								G1/2

Type	L1			L2	L7	L8	L9
	[V24] [V110] [V230]	[10V24]	[10V24P]				
MS4-...							
MS4-DE-1/8	115.4	112.9	117.8	31.5	8.6	36.7	26.1
MS4-DE-1/4							
MS6-...							
MS6-DE-1/4	149	147	152	46	8.6	37	26
MS6-DE-3/8							
MS6-DE-1/2							

Note: This product conforms to ISO 1179-1 and ISO 228-1.

Datasheet

Dimensions – Pressure gauges/pressure gauge alternatives

Download CAD data ➔ www.festo.com

[AG] Integrated MS pressure gauge with standard scale
[RG] Integrated MS pressure gauge with red/green scale

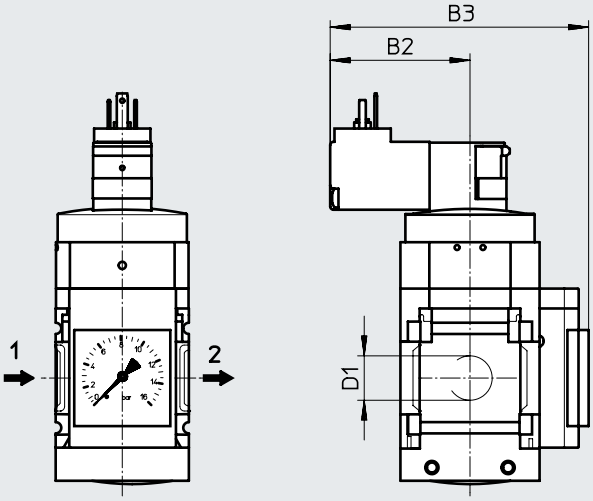

➔ Flow direction

[A8] Adapter for EN pressure gauge 1/8, without pressure gauge
[A4] Adapter for EN pressure gauge 1/4, without pressure gauge

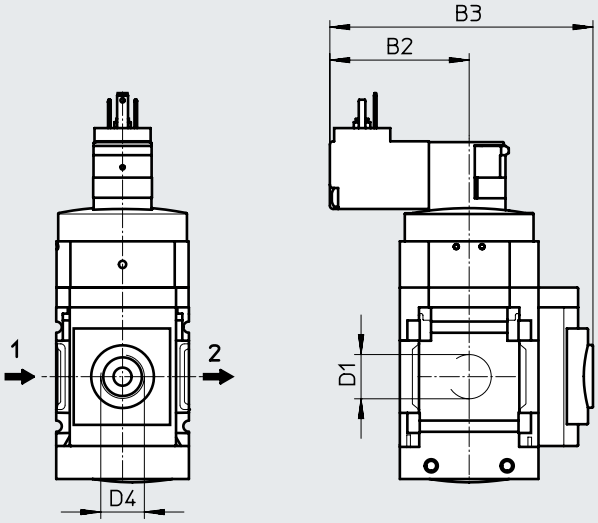

➔ Flow direction

Type	B2		B3		D1	D4
	[V24] [V110] [V230]	[10V24] [10V24P]	[V24] [V110] [V230]	[10V24] [10V24P]		
MS4-...						
MS4-DE-1/8-...-AG	42.2	34.9	78.2	70.9	G1/8	–
MS4-DE-1/4-...-AG					G1/4	
MS4-DE-1/8-...-RG	42.2	34.9	79.7	72.4	G1/8	–
MS4-DE-1/4-...-RG					G1/4	
MS4-DE-1/8-...-A8	42.2	34.9	79.7	72.4	G1/8	G1/8
MS4-DE-1/4-...-A8					G1/4	
MS4-DE-1/8-...-A4	42.2	34.9	79.7	72.4	G1/8	G1/4
MS4-DE-1/4-...-A4					G1/4	
MS6-...						
MS6-DE-1/4-...-AG	52	44	98	90	G1/4	–
MS6-DE-3/8-...-AG					G3/8	
MS6-DE-1/2-...-AG					G1/2	
MS6-DE-1/4-...-RG	52	44	99.5	91.5	G1/4	–
MS6-DE-3/8-...-RG					G3/8	
MS6-DE-1/2-...-RG					G1/2	
MS6-DE-1/4-...-A4	52	44	99.5	91.5	G1/4	G1/4
MS6-DE-3/8-...-A4					G3/8	
MS6-DE-1/2-...-A4					G1/2	

Datasheet

Dimensions – Pressure sensor

Download CAD data ➔ www.festo.com

Datasheets ➔ Internet: sde5

[AD7], [AD8], [AD9], [AD10] Pressure sensor with status indicator

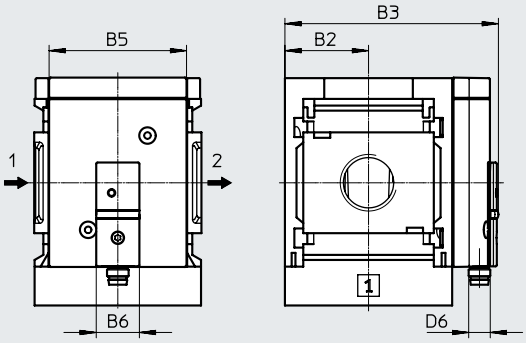

➔ Flow direction

[AD7]:
SDE5-D10-O-...-P-M8 with 1x 3-pin M8 plug, threshold value comparator, 1 switching output PNP, N/O contact

[AD8]:
SDE5-D10-C-...-P-M8 with 1x 3-pin M8 plug, threshold value comparator, 1 switching output PNP, N/C contact

[AD9]:
SDE5-D10-O3-...-P-M8 with 1x 3-pin M8 plug, window comparator, 1 switching output PNP, N/O contact

[AD10]:
SDE5-D10-C3-...-P-M8 with 1x 3-pin M8 plug, window comparator, 1 switching output PNP, N/C contact

Type	B2	B3	B4	B5	B6	D6	L5	L6
MS4-...								
MS4-...-AD7, AD8, AD9, AD10	21	59.1	–	~32	16	M8x1	–	–
MS6-...								
MS6-...-AD7, AD8, AD9, AD10	31	79.1	–	~51	16	M8x1	–	–

Ordering data

Size	Connection	Supply voltage	Flow direction	Part no.	Type
MS4	G1/4	24 V DC	From left to right	**542558**	**MS4-DE-1/4-10V24**
		110 V AC	From left to right	**529519**	**MS4-DE-1/4-V110**
		230 V AC	From left to right	**529521**	**MS4-DE-1/4-V230**
MS6	G1/4	24 V DC	From left to right	**542564**	**MS6-DE-1/4-10V24**
	G3/8	24 V DC	From left to right	**542566**	**MS6-DE-3/8-10V24**
	G1/2	24 V DC	From left to right	**542562**	**MS6-DE-1/2-10V24**
		110 V AC	From left to right	**529799**	**MS6-DE-1/2-V110**
		230 V AC	From left to right	**529801**	**MS6-DE-1/2-V230**

Ordering data – Modular product system

Ordering table Grid dimension [mm]	40	62	Conditions	Code		Enter code
Module no.	**527713**	**527686**				
Series	Standard			**MS**		MS
Size	4	6		**...**		
Function	Soft-start valve, electric			**-DE**		-DE
Pneumatic connection	Female thread G1/8	–	[1]	**-1/8**		
	Female thread G1/4	Female thread G1/4	[1]	**-1/4**		
	–	Female thread G3/8	[1]	**-3/8**		
	–	Female thread G1/2	[1]	**-1/2**		
	Connecting plate G1/8	–		**-AGA**		
	Connecting plate G1/4	Connecting plate G1/4		**-AGB**		
	Connecting plate G3/8	Connecting plate G3/8		**-AGC**		
	–	Connecting plate G1/2		**-AGD**		
	–	Connecting plate G3/4		**-AGE**		
	Connecting plate 1/8 NPT	–	[1]	**-AQK**		
	Connecting plate 1/4 NPT	Connecting plate 1/4 NPT	[1]	**-AQN**		
	Connecting plate 3/8 NPT	Connecting plate 3/8 NPT	[1]	**-AQP**		
	–	Connecting plate 1/2 NPT	[1]	**-AQR**		
	–	Connecting plate 3/4 NPT	[1]	**-AQS**		
Supply voltage	24 V DC (plug pattern to EN 175301) 4 ... 14 bar	4 ... 18 bar		**-V24**		
	24 V DC (plug pattern to EN 175301) 4 ... 10 bar	4 ... 10 bar	[1] [2]	**-10V24**		
	24 V DC, M12 to IEC 61076-2-101 4 ... 10 bar	4 ... 10 bar	[1] [2]	**-10V24P**		
	110 V AC (plug pattern to EN 175301) 4 ... 14 bar	4 ... 18 bar	[1]	**-V110**		
	230 V AC (plug pattern to EN 175301) 4 ... 14 bar	4 ... 18 bar	[1]	**-V230**		

[1] 1/8; 1/4; 3/8; 1/2, AQK, AQN, AQP, AQR, AQS, 10V24, 10V24P, V110, V230, AD7 ... AD10, WPM — Not with EU EX2 certification.

[2] 10V24, 10V24P — Max. operating pressure: 10 bar.

Ordering data – Modular product system

Ordering table Grid dimension [mm]	40	62	Conditions	Code		Enter code
Pressure gauge/pressure gauge alternatives	None					
	MS pressure gauge, bar			**-AG**		
	Adapter for EN pressure gauge 1/8, without pressure gauge	–		**-A8**		
	Adapter for EN pressure gauge 1/4, without pressure gauge			**-A4**		
	Integrated pressure gauge, red/green scale			**-RG**		
	Pressure sensor with status indicator, plug M8, threshold value comparator, PNP, N/O contact		[1] [3]	**-AD7**		
	Pressure sensor with status indicator, plug M8, threshold value comparator, PNP, N/C contact		[1] [3]	**-AD8**		
	Pressure sensor with status indicator, plug M8, window comparator, PNP, N/O contact		[1] [3]	**-AD9**		
	Pressure sensor with status indicator, plug M8, window comparator, PNP, N/C contact		[1] [3]	**-AD10**		
Alternative pressure gauge scale	None					
	psi		[4]	**-PSI**		
	MPa		[5]	**-MPA**		
Type of mounting	Without mounting bracket					
	Mounting bracket standard design		[6]	**-WP**		
	Mounting bracket for hooking in service unit components		[1] [6]	**-WPM**		
	Mounting bracket centrally at rear (wall mounting top and bottom), connecting plates not required			**-WB**		
	Mounting bracket centrally at rear (wall mounting top), connecting plates not required	–		**-WBM**		
EU certification	None					
	II 3GD to EU Explosion Protection Directive (ATEX)			**-EX2**		
UL certification	None					
	cULus, ordinary location for Canada and USA		[7]	**-UL1**		
Flow direction	Flow direction from left to right					
	Flow direction from right to left			**-Z**		

[1] 1/8; 1/4; 3/8; 1/2, AQK, AQN, AQP, AQR, AQS, 10V24, 10V24P, V110, V230, AD7 ... AD10, WPM — Not with EU EX2 certification.
[3] AD7 ... AD10 — Measuring range max. 10 bar.
[4] PSI — Only in combination with pressure gauge AG.
[5] MPA — Only in combination with pressure gauge AG or RG.
[6] WP, WPM — Only with connecting plate AGA, AGB, AGC, AGD, AGE, AQK, AQN, AQP, AQR or AQS.
[7] UL1 — Not with supply voltage V110, V230.

Peripherals overview

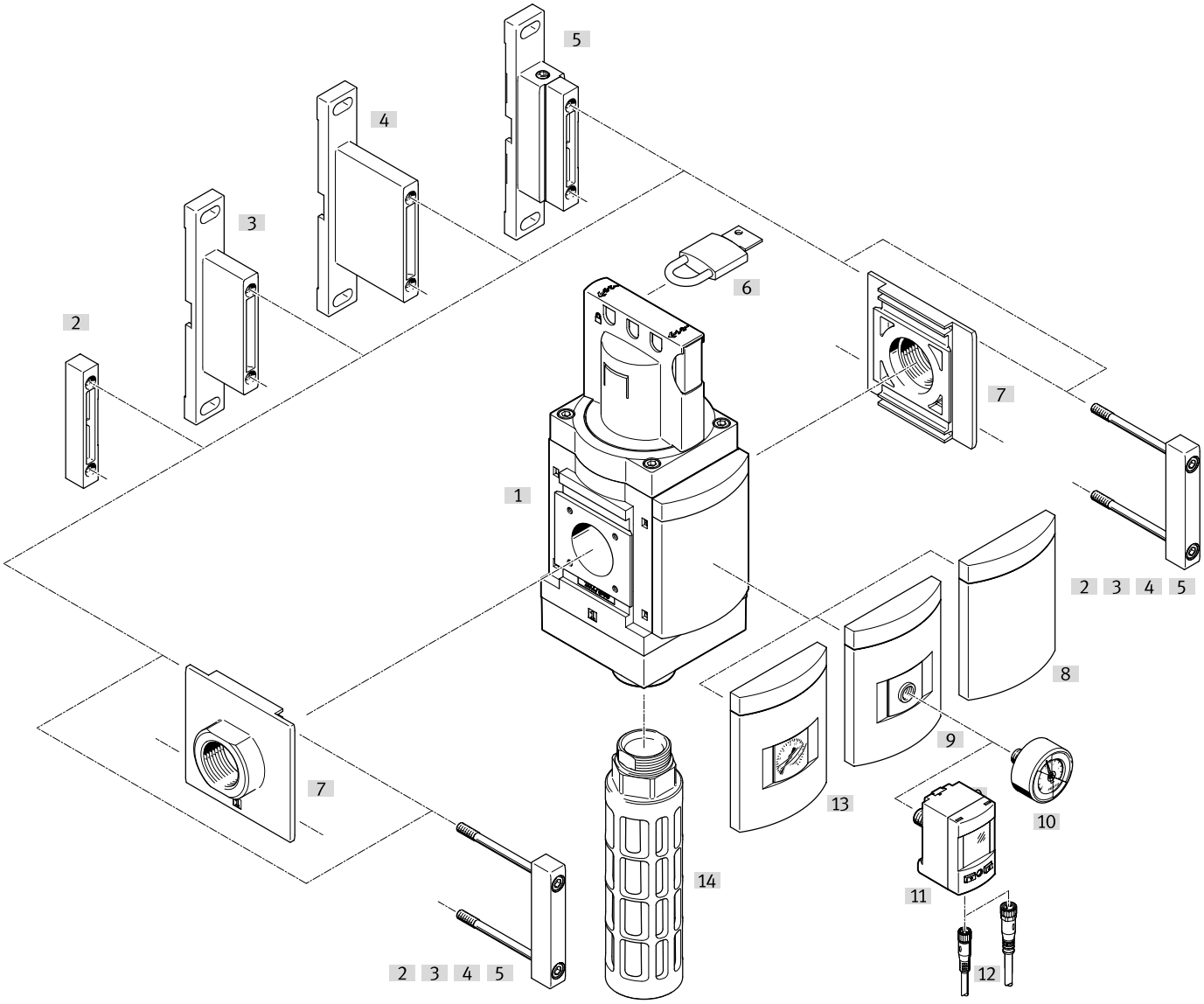

Note

Additional accessories:

- Module connector for combination with size MS6, MS9 or MS12
  ➔ Internet: rmv, armv

Peripherals overview

Mounting attachments and accessories			
		Order code	→ Page/Internet
[1]	On/off valve	MS9-EM	61
Can be ordered via the modular product system			
[3]	Mounting bracket[2]	[WP]	66
[4]	Mounting bracket[2]	[WPB]	
[5]	Mounting bracket	[WPM]	
[7]	Connecting plate SET[1]	[AG...]	
	Connecting plate SET[1]	[AQ...]	
[8]	Cover plate	[VS]	
[9]	Adapter for EN pressure gauge 1/4	[A4]	
[13]	MS pressure gauge	[AG], [RG]	
[14]	Silencer	[S]	
Can be ordered as accessories			
[2]	Module connector	MS9-MV	ms9-mv
[3]	Mounting bracket[2]	MS9-WP	ms9-wp
[4]	Mounting bracket[2]	MS9-WPB	ms9-wp
[5]	Mounting bracket	MS9-WPM	ms9-wp
[6]	Padlock	LRVS-D	103
[7]	Connecting plate SET	MS9-AG...	ms9-ag
	Connecting plate SET	MS9-AQ...	ms9-aq
[10]	Pressure gauge	MA	103
[11]	Pressure sensor	SPAU-...-T-R14M	102
[12]	Connecting cable	NEBU-M8...-LE4, NEBU-M12...-LE4	103
[14]	Silencer	U	103

1) Module connector [2] is included in the scope of delivery.
2) The screws for the wall bracket on the rear are partially covered by the housing of this service unit component. Depending on the configuration of the service unit combination, the screws will no longer be accessible. The mounting bracket MS9-WPM is therefore recommended for wall mounting. It can be used to attach a fully assembled combination to the pre-mounted wall bracket.

Type codes

001	Series	
MS	MS series	

002	Size	
9	Grid dimension 90 mm	

003	Function	
EM	On/off valve, manual	

004	Pneumatic connection	
3/4	Female thread G3/4	
1	Female thread G1	
AGD	Sub-base G1/2	
AGE	Sub-base G3/4	
AGF	Sub-base G1	
AGG	Connecting plate G1 1/4	
AGH	Connecting plate G1 1/2	
N3/4	Female thread 3/4 NPT	
N1	Female thread 1 NPT	
AQR	Sub-base 1/2 NPT	
AQS	Sub-base 3/4 NPT	
AQT	Sub-base 1 NPT	
AQU	Sub-base 1 1/4 NPT	
AQV	Sub-base 1 1/2 NPT	
G	Module without connecting thread, without sub-base	
NG	Module without connecting thread, without sub-base (inch)	

005	Silencer	
	None	
S	Silencer	

006	Pressure gauge alternatives	
	None	
AG	MS pressure gauge	
VS	Cover plate	
A8	Adapter for EN pressure gauge 1/8, without pressure gauge	
A4	Adapter for EN pressure gauge 1/4, without pressure gauge	
RG	Integrated pressure gauge, red/green scale	
AD7	Pressure sensor with switching display, M8 plug, threshold value comparator, PNP, N/O	
AD8	Pressure sensor with switching display, M8 plug, threshold value comparator, PNP, N/C	
AD9	Pressure sensor with switching display, M8 plug, window comparator, PNP, N/O	
AD10	Pressure sensor with operational status indicator, M8 plug, window comparator, PNP, N/C	

007	Alternative pressure gauge scale	
	MS pressure gauge	
PSI	psi	
BAR	bar	
MPA	MPa	

008	Valve function	
	Standard	
2	2/2-way valve	

009	Type of mounting	
	Without mounting bracket	
WP	Mounting bracket basic design	
WPB	Mounting bracket for large wall gap	
WPM	Mounting bracket for hooking in service unit components	

010	UL certification	
	None	
UL1	cULus ordinary location for Canada and USA	

011	Flow direction	
	Flow direction from left to right	
Z	Flow direction from right to left	

Datasheet

2/2-way valve, bistable

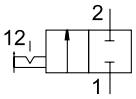

3/2-way valve, bistable

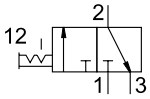

Flow rate
8000 ... 18000 l/min

Temperature range
–10 ... +60 °C

Operating pressure
0 ... 20 bar

www.festo.com

- Manually actuated on/off valve for pressurising and exhausting pneumatic systems
- Ducted exhaust is possible via a threaded connection with silencer
- The switching position is immediately recognisable
- Actuation is prevented by locking the rotary knob
- Commercially available padlock can be used for security
- Optional pressure gauge
- Optional pressure sensor
- Optional device variant EX4 for use in potentially explosive areas in zones 1, 2, 21 and 22

General technical data

Pneumatic connection 1, 2		
Female thread		G3/4, G1, 3/4 NPT or 1 NPT
Connecting plate	[AG...]	G1/2, G3/4, G1, G1 1/4 or G1 1/2
	[AQ...]	1/2 NPT, 3/4 NPT, 1 NPT, 1 1/4 NPT or 1 1/2 NPT
Module without connecting thread/connecting plate	[G], [NG]	–
Pneumatic connection 3		
Pneumatic connection 1, 2	[3/4], [1], [AG...], [G]	G1
	[N3/4], [N1], [AQ...], [NG]	G1 with silencer [S]
		1 NPT without silencer [S]
Design		Piston spool valve
Type of mounting		With accessories
		In-line installation
Mounting position		Any[1)]
Actuator lock		Rotary knob with latch
Pressure indication		Via pressure sensor for indicating the status of the output pressure and the electrical output
		Via pressure gauge for displaying the output pressure
		Via pressure gauge with red/green scale for indicating the output pressure
		Prepared for G1/4
Valve function		2/2-way valve, bistable
		3/2-way valve, bistable
Exhaust function		Cannot be throttled
Reset method		Force-pilot actuated
Type of actuation		Direct
Sealing principle		Soft

1) The on/off valve must be mounted vertically when combined with a pressure sensor as condensate must not collect in the pressure sensor.

Note: This product conforms to ISO 1179-1 and ISO 228-1.

Datasheet

Characteristic flow rate values								
Pneumatic connection 1, 2	Female thread		Connecting plate					None
	[3/4], [N3/4]	[1], [N1]	[AGD], [AQR]	[AGE], [AQS]	[AGF], [AQT]	[AGG], [AQU]	[AGH], [AQV]	[G], [NG]
Standard nominal flow rate qnN[1] [l/min]								
In main flow direction 1 ➔ 2	14500	18000	8000	14000	18000	18000	18000	18000
In relief direction 2 ➔ 3	14900	14100	16500	14400	13800	13200	13200	14100
C value [l/s*min]								
In main flow direction 1 ➔ 2	59.59	76.90	32.75	57.50	75.65	75.51	75.17	–
In relief direction 2 ➔ 3	55.11	53.54	56.22	54.07	52.73	51.06	51.36	–
b value								
In main flow direction 1 ➔ 2	0.41	0.37	0.45	0.39	0.38	0.39	0.38	–
In relief direction 2 ➔ 3	0.50	0.48	0.60	0.49	0.47	0.45	0.44	–

1) Measured at p1 = 6 bar and p2 = 5 bar, Δp = 1 bar.

Operating and environmental conditions		
	Without pressure sensor	Pressure sensor
Operating pressure [bar]	0 ... 20	0 ... 10
Operating medium	Compressed air to ISO 8573-1:2010 [7:4:4]	
Note on the operating/pilot medium	Lubricated operation possible (in which case lubricated operation will always be required)	
Ambient temperature [°C]	–10 ... +60	0 ... +50
Temperature of medium [°C]	–10 ... +60	0 ... +50
Corrosion resistance class CRC[1]	2	
Noise level [dB (A)]	93[2] with silencer	
UL certification[3]	c UL us - Recognized (OL)	

1) More information www.festo.com/x/topic/crc
2) Exhaust at 10 bar at a distance of 1 m.
3) More information: www.festo.com/catalogue/ms9-em ➔ Support/Downloads.

ATEX	
EU certification	[EX4]
ATEX category for gas	II 2G
Type of (ignition) protection for gas	Ex h IIC T6 Gb X
ATEX category for dust	II 2D
Type of (ignition) protection for dust	Ex h IIIC T60°C Db X
Explosion ambient temperature	–10°C ≤ Ta ≤ +60 °C
CE marking (see declaration of conformity)[1]	To EU Explosion Protection Directive (ATEX)

1) More information: www.festo.com/catalogue/ms9-em ➔ Support/Downloads.

Weight [g]	
On/off valve	2200
On/off valve with silencer	2400

Datasheet

Materials

Sectional view

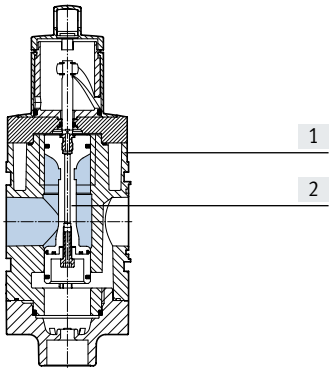

On/off valve	
[1] Housing	Die-cast aluminium
[2] Piston spool	POM
– Seals	NBR
Note on materials	RoHS-compliant
LABS (PWIS) conformity	VDMA24364-B1/B2-L

Dimensions – Basic version

Download CAD data ➔ www.festo.com

[G], [NG] Module without connecting thread, without connecting plate
[VS] Cover plate
[] 3/2-way valve
[2] 2/2-way valve
[S] Silencer
[EX4] EU certification

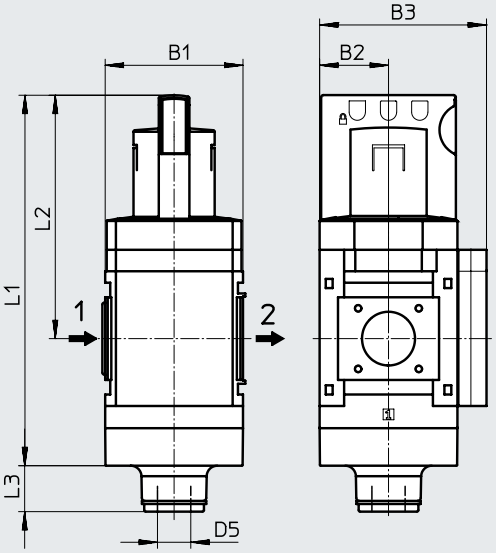

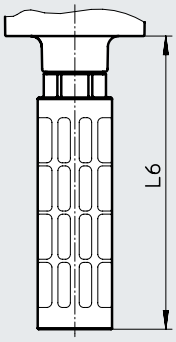

➔ Flow direction

Type	B1	B2	B3	D5	L1	L2	L3	L6	
								[S]	[S]+[EX4]
MS9-EM-G, NG-VS	90	45	109	G1	242	159	23	189	138
MS9-EM-G, NG-VS-2							30	–	–

Datasheet

Dimensions – Female thread/connecting plate Download CAD data ➔ www.festo.com

[3/4], [1], [N3/4], [N1] Female thread

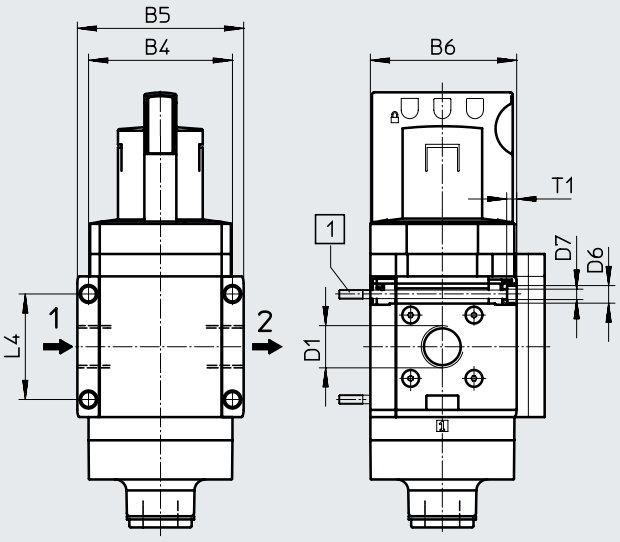

[1] Retaining screw M6xmin. 90 to DIN 912 (not in the scope of delivery) for wall mounting without mounting bracket

➔ Flow direction

[AG...], [AQ...] Connecting plate

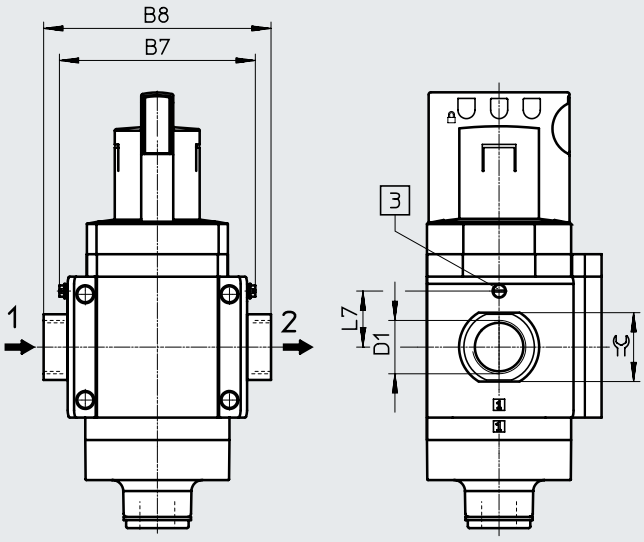

[3] Earthing screw M4x8 (only with MS9-...-EX4)

➔ Flow direction

Type	B4	B5	B6	B7	[EX4]	B8	D1	D6	D7	L4	L7	[EX4]	T1	⌀
MS9-EM-3/4	90	104	91.5	–	–	–	G3/4	11	6.5	66	–		6	–
MS9-EM-1							G1							
MS9-EM-AGD	–	–	–	112	122	132	G1/2	–	–	–	35		–	30
MS9-EM-AGE						132	G3/4							36
MS9-EM-AGF						142	G1							41
MS9-EM-AGG						162	G1 1/4							50
MS9-EM-AGH						176	G1 1/2							55
MS9-EM-N3/4	90	104	91.5	–	–	–	3/4 NPT	11	6.5	66	–		6	–
MS9-EM-N1							1 NPT							
MS9-EM-AQR	–	–	–	112	–	132	1/2 NPT	–	–	–	–		–	30
MS9-EM-AQS						132	3/4 NPT							36
MS9-EM-AQT						142	1 NPT							41
MS9-EM-AQU						162	1 1/4 NPT							50
MS9-EM-AQV						176	1 1/2 NPT							55

Note: This product conforms to ISO 1179-1 and ISO 228-1.

Datasheet

Dimensions – Pressure gauges/adapters Download CAD data ➔ www.festo.com

[AG] Integrated MS pressure gauge with standard scale
[RG] Integrated MS pressure gauge with red/green scale

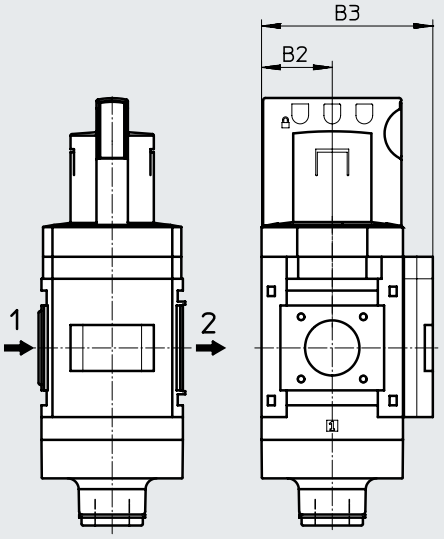

➔ Flow direction

[A4] Adapter for EN pressure gauge 1/4, without pressure gauge

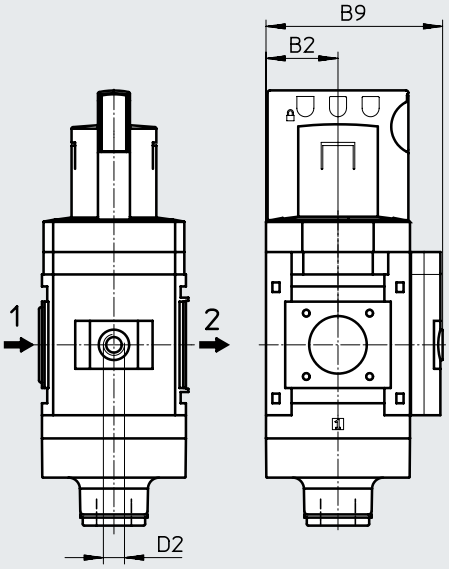

➔ Flow direction

Type	B2	B3	B9	D2
MS9-EM-...-AG, RG	45	109	–	–
MS9-EM-...-A4		–	110	G1/4

Dimensions – Pressure sensor Download CAD data ➔ www.festo.com

[AD7], [AD8], [AD9], [AD10] Pressure sensor with status indicator

Datasheets ➔ Internet: sde5

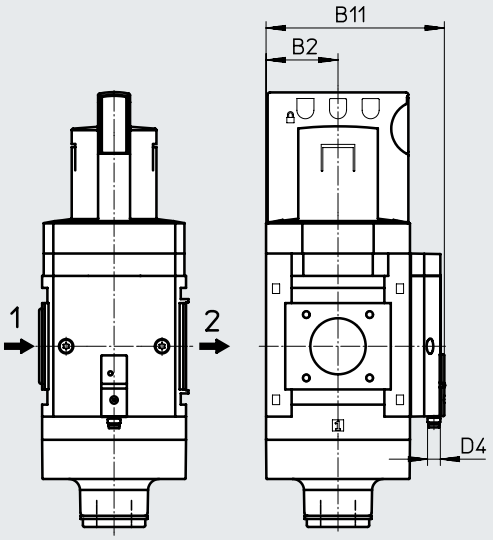

➔ Flow direction

[AD7]:
SDE5-D10-O-...-P-M8 with 1x 3-pin M8 plug, threshold value comparator, 1 switching output PNP, N/O contact

[AD8]:
SDE5-D10-C-...-P-M8 with 1x 3-pin M8 plug, threshold value comparator, 1 switching output PNP, N/C contact

[AD9]:
SDE5-D10-O3-...-P-M8 with 1x 3-pin M8 plug, window comparator, 1 switching output PNP, N/O contact

[AD10]:
SDE5-D10-C3-...-P-M8 with 1x 3-pin M8 plug, window comparator, 1 switching output PNP, N/C contact

Type	B2	B11	D4
MS9-EM-...-AD7, AD8, AD9, AD10	45	112	M8

Ordering data

3/2-way valve, silencer, cover plate

Size	Connection 1, 2	Connection 3	Flow direction	Part no.	Type
MS9	Without connecting thread	G thread	From left to right	**562952**	**MS9-EM-G-S-VS**
		G thread	From left to right	**562954**	**MS9-EM-NG-S-VS**

Ordering data – Modular product system

Ordering table Grid dimension [mm]	90	Conditions	Code		Enter code
Module no.	**562178**				
Series	Standard		**MS**		MS
Size	9		**9**		9
Function	On/off valve, manual		**-EM**		-EM
Pneumatic connection	Female thread G3/4	[1]	**-3/4**		
	Female thread G1	[1]	**-1**		
	Connecting plate G1/2		**-AGD**		
	Connecting plate G3/4		**-AGE**		
	Connecting plate G1		**-AGF**		
	Connecting plate G1 1/4		**-AGG**		
	Connecting plate G1 1/2		**-AGH**		
	Female thread 3/4 NPT	[1]	**-N3/4**		
	Female thread 1 NPT	[1]	**-N1**		
	Connecting plate 1/2 NPT	[1]	**-AQR**		
	Connecting plate 3/4 NPT	[1]	**-AQS**		
	Connecting plate 1 NPT	[1]	**-AQT**		
	Connecting plate 1 1/4 NPT	[1]	**-AQU**		
	Connecting plate 1 1/2 NPT	[1]	**-AQV**		
	Module without connecting thread, without connecting plate	[1]	**-G**		
	Module without connecting thread, without connecting plate (connection 3 in NPT)	[1]	**-NG**		
Rotary knob colour	Standard (black/blue)				
	Red		**-R**		
Silencer	None				
	Silencer		**-S**		
Pressure gauge/adapter	MS pressure gauge, bar		**-AG**		
	Cover plate		**-VS**		
	Adapter for EN pressure gauge 1/4, without pressure gauge		**-A4**		
	Integrated pressure gauge, red/green scale	[2]	**-RG**		
	Pressure sensor with status indicator, plug M8, threshold value comparator, PNP, N/O contact	[1] [3]	**-AD7**		
	Pressure sensor with status indicator, plug M8, threshold value comparator, PNP, N/C contact	[1] [3]	**-AD8**		
	Pressure sensor with status indicator, plug M8, window comparator, PNP, N/O contact	[1] [3]	**-AD9**		
	Pressure sensor with status indicator, plug M8, window comparator, PNP, N/C contact	[1] [3]	**-AD10**		
Alternative pressure gauge scale	None	[4]			
	psi	[5]	**-PSI**		
	MPa	[5]	**-MPA**		
	bar	[5]	**-BAR**		
Valve function	Standard (3/2-way valve)				
	2/2-way valve	[6]	**-2**		
Type of mounting	Without mounting bracket				
	Mounting bracket standard design	[7]	**-WP**		
	Mounting bracket for hooking in service unit components	[1] [7]	**-WPM**		
	Mounting bracket for large wall gap	[7]	**-WPB**		
EU certification	None				
	II 2GD to EU Explosion Protection Directive (ATEX)		**-EX4**		
UL certification	None				
	cULus, ordinary location for Canada and USA		**-UL1**		
Flow direction	Flow direction from left to right				
	Flow direction from right to left		**-Z**		

[1]	3/4; 1, N3/4, N1, AQR, AQS, AQT, AQU, AQV, G, NG, AD7 ... AD10, WPM	Not with EU EX4 certification.
[2]	RG	Not with alternative pressure gauge scale PSI, PSI scale is only used as an auxiliary scale.
[3]	AD7 ... AD10	Measuring range max. 10 bar.
[4]	–	Not with pressure gauge AG, RG.
[5]	PSI, MPA, BAR	Not with adapter VS, A4, AD7, AD8, AD9, AD10.
[6]	2	Not with silencer S.
[7]	WP, WPM, WPB	Not with pneumatic connection G, NG.

Peripherals overview

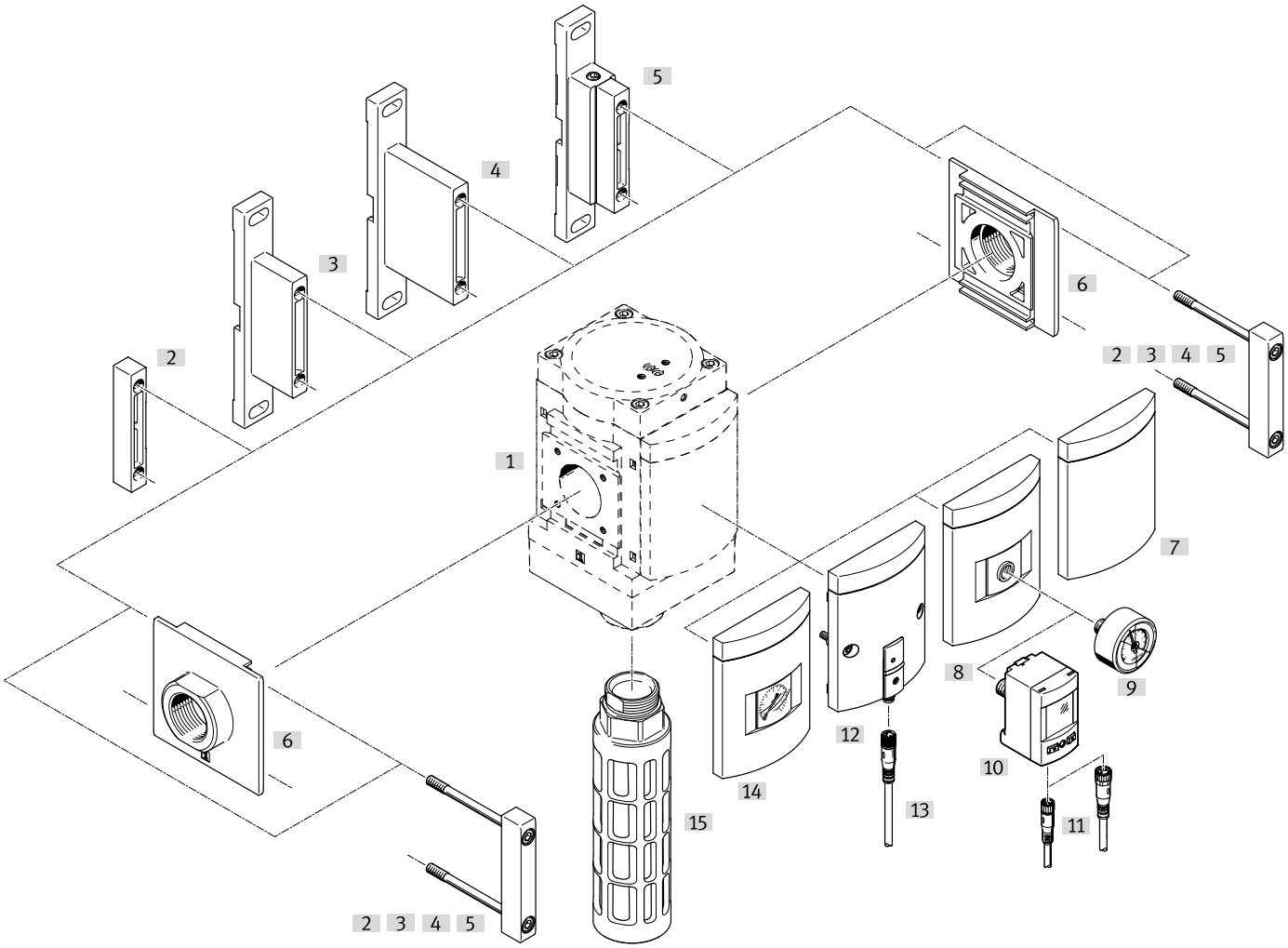

Note

Additional accessories:

- Module connector for combination with size MS6, MS9 or MS12
  ➔ Internet: rmv, armv

Peripherals overview

Supply voltage
V24, V110, V230

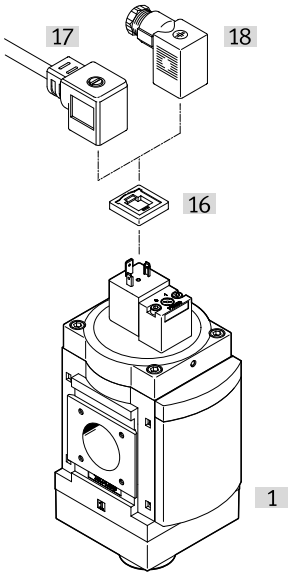

Supply voltage
V24P

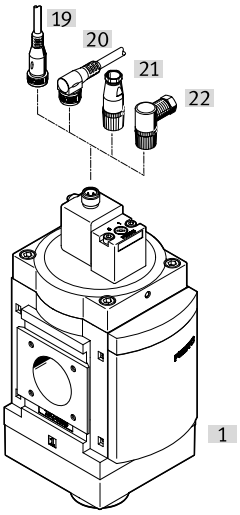

Mounting attachments and accessories		Order code	→ Page/Internet
[1]	On/off valve	MS9-EE	71
Can be ordered via the modular product system			
[3]	Mounting bracket[2]	[WP]	76
[4]	Mounting bracket[2]	[WPB]	
[5]	Mounting bracket	[WPM]	
[6]	Connecting plate SET[1]	[AG...]	
	Connecting plate SET[1]	[AQ...]	
[8]	Adapter for EN pressure gauge 1/4	[A4]	
[7]	Cover plate	[VS]	
[12]	Pressure sensor SDE5 with status indicator	[AD7]	
[14]	MS pressure gauge	[AG], [RG]	
[15]	Silencer	[S]	
Can be ordered as accessories			
[2]	Module connector	MS9-MV	ms9-mv
[3]	Mounting bracket[2]	MS9-WP	ms9-wp
[4]	Mounting bracket[2]	MS9-WPB	ms9-wp
[5]	Mounting bracket	MS9-WPM	ms9-wp
[6]	Connecting plate SET	MS9-AG...	ms9-ag
	Connecting plate SET	MS9-AQ...	ms9-aq
[9]	Pressure gauge	MA	103
[10]	Pressure sensor	SPAU-...-T-R14M	102
[11]	Connecting cable	NEBU-M8...-LE4, NEBU-M12...-LE4	103
[13]	Connecting cable	NEBU-M8...-LE3	103
[15]	Silencer	U	103
[16]	Illuminating seal	MC-LD	102
[17]	Connecting cable	KMC	102
[18]	Plug socket	MSSD-C	102
[19]	Connecting cable	NEBU-M12G5	103
[20]	Connecting cable	NEBU-M12W5	103
[21]	Sensor socket	SIE-GD	103
[22]	Angled plug socket	SIE-WD	103

1) Module connector [2] is included in the scope of delivery.
2) The screws for the wall bracket on the rear are partially covered by the housing of this service unit component. Depending on the configuration of the service unit combination, the screws will no longer be accessible. The mounting bracket MS9-WPM is therefore recommended for wall mounting. It can be used to attach a fully assembled combination to the pre-mounted wall bracket.

Type codes

001	Series	
MS	MS series	

002	Size	
9	Grid dimension 90 mm	

003	Function	
EE	On/off valve, electric	

004	Pneumatic connection	
3/4	Female thread G3/4	
1	Female thread G1	
AGD	Sub-base G1/2	
AGE	Sub-base G3/4	
AGF	Sub-base G1	
AGG	Connecting plate G1 1/4	
AGH	Connecting plate G1 1/2	
N3/4	Female thread 3/4 NPT	
N1	Female thread 1 NPT	
AQR	Sub-base 1/2 NPT	
AQS	Sub-base 3/4 NPT	
AQT	Sub-base 1 NPT	
AQU	Sub-base 1 1/4 NPT	
AQV	Sub-base 1 1/2 NPT	
G	Module without connecting thread, without sub-base	
NG	Module without connecting thread, without sub-base (inch)	

005	Supply voltage	
V110	110 V AC (connection pattern to EN 175301)	
V24	24 V DC (connection pattern to EN 175301)	
V230	230 V AC (connection pattern to EN 175301)	
V24P	24 V DC plug (connection pattern M12 to DESINA)	

006	Silencer	
	None	
S	Silencer	

007	Pressure gauge alternatives	
	None	
AG	MS pressure gauge	
VS	Cover plate	
A8	Adapter for EN pressure gauge 1/8, without pressure gauge	
A4	Adapter for EN pressure gauge 1/4, without pressure gauge	
RG	Integrated pressure gauge, red/green scale	
AD7	Pressure sensor with switching display, M8 plug, threshold value comparator, PNP, N/O	

008	Alternative pressure gauge scale	
	MS pressure gauge	
PSI	psi	
BAR	bar	
MPA	MPa	

009	Valve function	
	Standard	
2	2/2-way valve	

010	Type of mounting	
	Without mounting bracket	
WP	Mounting bracket basic design	
WPB	Mounting bracket for large wall gap	
WPM	Mounting bracket for hooking in service unit components	

011	EU certification	
	None	
EX2	II 3GD	

012	UL certification	
	None	
UL1	cULus ordinary location for Canada and USA	

013	Flow direction	
	Flow direction from left to right	
Z	Flow direction from right to left	

Datasheet

2/2-way valve, closed, single solenoid

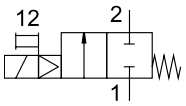

3/2-way valve, closed, single solenoid

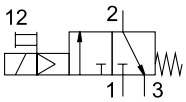

Flow rate
8000 ... 18000 l/min

Temperature range
–10 ... +60 °C

Operating pressure
3.5 ... 16 bar

www.festo.com

- Electrically actuated on/off valve for pressurising and exhausting pneumatic systems
- Ducted exhaust is possible via a threaded connection with silencer
- With solenoid coil, without plug socket
- Choice of three voltage ranges
- Detenting and non-detenting manual override
- Optional pressure gauge
- Optional device variant EX2 for use in potentially explosive areas in zones 2 and 22 (plug socket MSSD-C-24V-EX included in scope of delivery)

General technical data		
Pneumatic connection 1, 2		
Female thread		G3/4, G1, 3/4 NPT or 1 NPT
Connecting plate	[AG...]	G1/2, G3/4, G1, G1 1/4 or G1 1/2
	[AQ...]...	1/2 NPT, 3/4 NPT, 1 NPT, 1 1/4 NPT or 1 1/2 NPT
Module without connecting thread/connecting plate	[G, NG]	–
Pneumatic connection 3		
Pneumatic connection 1, 2	[3/4], [1]/ [AG...], [G]	G1
	[N3/4], [N1], [AQ...], [NG]	G1 with silencer [S]
	[N3/4], [N1], [AQ...]]	1 NPT without silencer [S]
Design		Piston spool valve
Type of mounting		With accessories
		In-line installation
Mounting position		Any
Pressure indication		Via pressure sensor for indicating the status of the output pressure and the electrical output
		Via pressure gauge for displaying the output pressure
		Via pressure gauge with red/green scale for indicating the output pressure
		Prepared for G1/4
Valve function		2/2-way valve, closed, single solenoid
		3/2-way valve, closed, single solenoid
Exhaust function		Cannot be throttled
Manual override		Non-detenting/detenting
Reset method		Mechanical spring
Type of actuation		Piloted
Pilot air supply		Internal
Sealing principle		Soft

Note: This product conforms to ISO 1179-1 and ISO 228-1.

Datasheet

Electrical data		
Characteristic coil data		
With supply voltage	[V24], [V24P]	24 V DC: 4.5 W, permissible voltage fluctuations ±10%
	[V110]	110 V AC: 50 Hz, pick-up power 11.5 W, holding power 8.9 W, permissible voltage fluctuations ±10%
		110 V AC: 60 Hz, pick-up power 9.5 W, holding power 6.2 W, permissible voltage fluctuations ±10%
	[V230]	230 V AC: 50 Hz, pick-up power 11.5 W, holding power 9.1 W, permissible voltage fluctuations ±10%
		230 V AC: 60 Hz, pick-up power 9.5 W, holding power 6.4 W, permissible voltage fluctuations ±10%
Electrical connection		
With supply voltage	[V24], [V110], [V230]	Plug, square design to EN 175301-803, type A
	[V24P]	M12 plug, 4-pin to DESINA
Degree of protection for solenoid coil		IP65
Duty cycle	[%]	100

Characteristic flow rate values								
Pneumatic connection	Female thread		Connecting plate					None
	G3/4/3/4 NPT	G1/1 NPT	AGD/AQR	AGE/AQS	AGF/AQT	AGG/AQU	AGH/AQV	G, NG
Standard nominal flow rate qnN[1] [l/min]								
In main flow direction 1 ➔ 2	14500	18000	8000	14000	18000	18000	18000	18000
In relief direction 2 ➔ 3	14900	14100	16500	14400	13800	13200	13200	14100
C value [l/s*min]								
In main flow direction 1 ➔ 2	59.59	76.90	32.75	57.50	75.65	75.51	75.17	–
In relief direction 2 ➔ 3	55.11	53.54	56.22	54.07	52.73	51.06	51.36	–
b value								
In main flow direction 1 ➔ 2	0.41	0.37	0.45	0.39	0.38	0.39	0.38	–
In relief direction 2 ➔ 3	0.50	0.48	0.60	0.49	0.47	0.45	0.44	–

1) Measured at p1 = 6 bar and p2 = 5 bar, Δp = 1 bar.

Operating and environmental conditions		
Operating pressure	[bar]	3.5 ... 16
Operating medium		Compressed air to ISO 8573-1:2010 [7:4:4]
Note on the operating/ pilot medium		Lubricated operation possible (in which case lubricated operation will always be required)
Ambient temperature	[°C]	–10 ... +60
Temperature of medium	[°C]	–10 ... +60
Corrosion resistance class CRC[1]		2
Noise level	[dB (A)]	93[2] with silencer
UL certification[3]		c UL us - Recognized (OL)

1) More information www.festo.com/x/topic/crc
2) Exhaust at 10 bar at a distance of 1 m.
3) More information: www.festo.com/catalogue/ms9-ee ➔ Support/Downloads.

ATEX	
EU certification	EX2
ATEX category for gas	II 3G
Type of (ignition) protection for gas	Ex nA IIC T5 X Gc
ATEX category for dust	II 3D
Type of (ignition) protection for dust	Ex tc IIIC T85°C X Dc IP65
Explosion ambient temperature	–10°C ≤ Ta ≤ +50 °C
Explosion protection certification outside the EU	EPL Db (GB) EPL Gb (GB)
CE marking (see declaration of conformity)[1]	To EU Explosion Protection Directive (ATEX)
UKCA marking (see declaration of conformity)[1]	To UK regulations for explosions
	To UK regulations for electrical equipment

1) More information: www.festo.com/catalogue/ms9-ee ➔ Support/Downloads.

Datasheet

Weight [g]	
On/off valve	2100
On/off valve with silencer S	2300

Materials

Sectional view

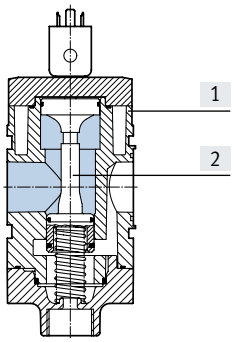

On/off valve		
[1]	Housing	Die-cast aluminium
[2]	Piston spool	POM
–	Seals	NBR
Note on materials		RoHS-compliant
LABS (PWIS) conformity		VDMA24364-B1/B2-L

Dimensions – Basic version

Download CAD data ➔ www.festo.com

[G], [NG] Module without connecting thread, without connecting plate

[S] Silencer

[VS] Cover plate

[V24], [V110], [V230]
Supply voltage

[V24P]
Supply voltage

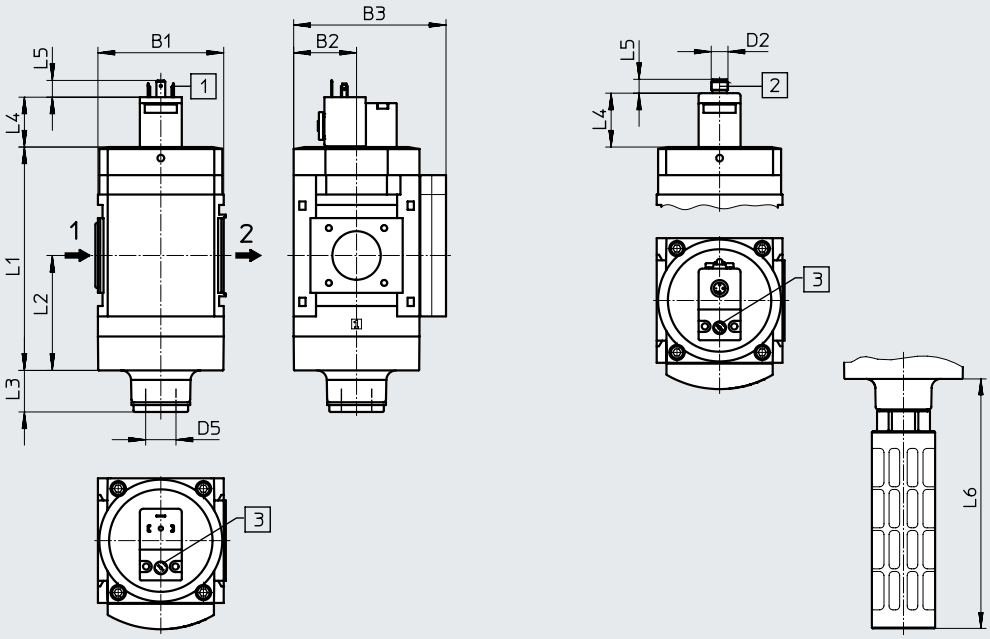

1 = Connected to 2
2 = Connected to 1
3 = com (–)
4 = Signal (+)

[1] Plug connection to EN 175301-803

[2] Plug connection M12, 4-pin to DESINA for connecting cable NEBU-M12

[3] Manual override

➔ Flow direction

Type	B1	B2	B3	D2	D5	L1	L2	L3		L4	L5	L6
								2/2-way valve	3/2-way valve			
MS9-EE-G, NG-V24, V110, V230	90	45	109	–	G1	161	83	30	23	36	12	189
MS9-EE-G, NG-V24P				M12x1						39	10	

Datasheet

Dimensions – Female thread/connecting plate Download CAD data ➔ www.festo.com

[3/4], [1], [N3/4], [N1] Female thread

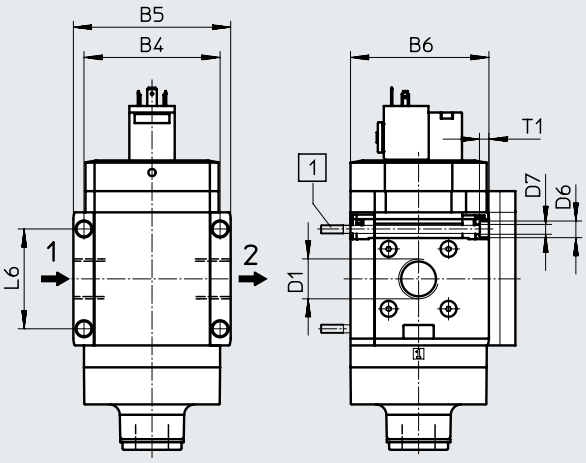

[1] Retaining screw M6xmin. 90 to DIN 912 (not in the scope of delivery) for wall mounting without mounting bracket

➔ Flow direction

[AG...], [AQ...] Connecting plate

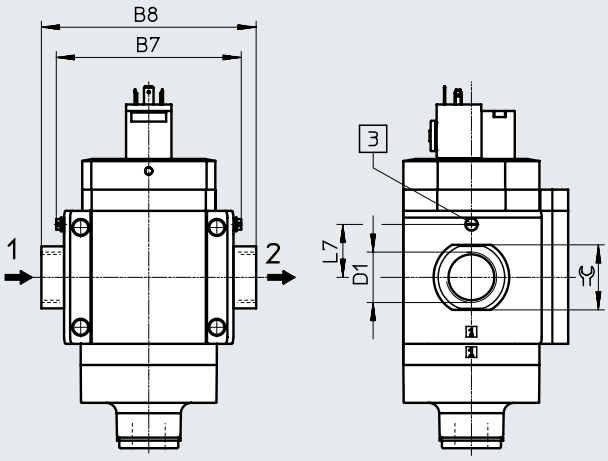

[3] Earthing screw M4x8 (only with MS9-...-EX2)

➔ Flow direction

Type	B4	B5	B6	B7		B8	D1	D6	D7	L6	L7	T1	⌀
					EX2						EX2		
MS9-EE-3/4	90	104	91.5	–	–	–	G3/4	11	6.5	66	–	6	–
MS9-EE-1							G1						
MS9-EE-AGD	–	–	–	112	122	132	G1/2	–	–	–	35	–	30
MS9-EE-AGE						132	G3/4						36
MS9-EE-AGF						142	G1						41
MS9-EE-AGG						162	G1 1/4						50
MS9-EE-AGH						176	G1 1/2						55
MS9-EE-N3/4	90	104	91.5	–	–	–	3/4 NPT	11	6.5	66	–	6	–
MS9-EE-N1							1 NPT						
MS9-EE-AQR	–	–	–	112	–	132	1/2 NPT	–	–	–	–	–	30
MS9-EE-AQS						132	3/4 NPT						36
MS9-EE-AQT						142	1 NPT						41
MS9-EE-AQU						162	1 1/4 NPT						50
MS9-EE-AQV						176	1 1/2 NPT						55

Note: This product conforms to ISO 1179-1 and ISO 228-1.

Datasheet

Dimensions – Pressure gauges/pressure gauge alternatives Download CAD data ➔ www.festo.com

[AG] Integrated MS pressure gauge with standard scale
[RG] Integrated MS pressure gauge with red/green scale

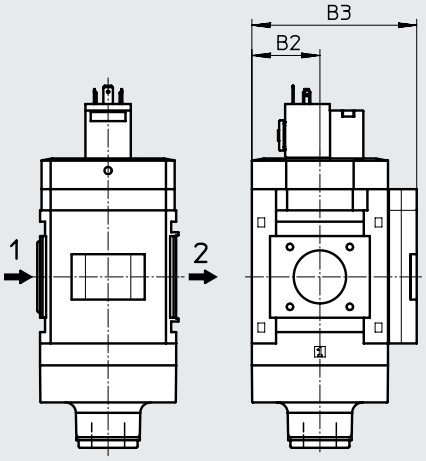

➔ Flow direction

[A4] Adapter for EN pressure gauge 1/4, without pressure gauge

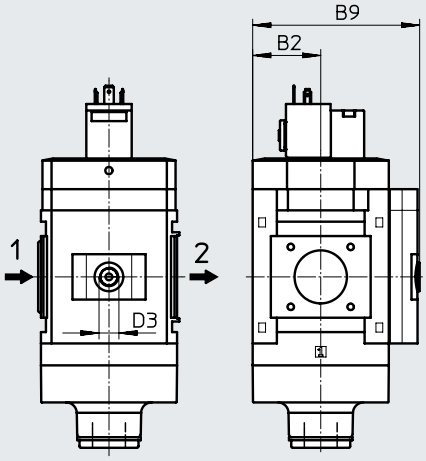

➔ Flow direction

Type	B2	B3	B9	D3
MS9-EE-...-AG, RG	45	109	–	–
MS9-EE-...-A4		–	110	G1/4

Note: This product conforms to ISO 1179-1 and ISO 228-1.

Dimensions – Pressure gauges/pressure gauge alternatives Download CAD data ➔ www.festo.com

[AD7] Pressure sensor with status indicator

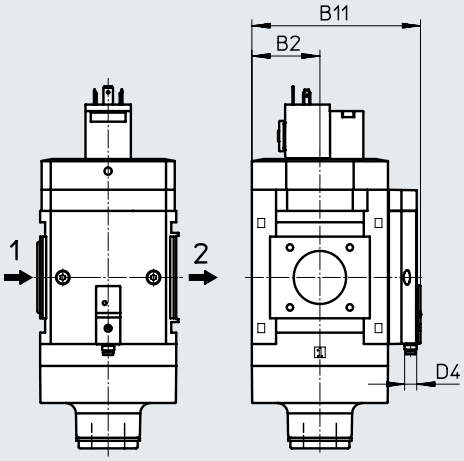

[AD7]:
SDE5-D10-O-...-P-M8 with 1x 3-pin M8 plug, threshold value comparator, 1 switching output PNP, N/O contact

➔ Flow direction

Type	B2	B11	D4
MS9-EE-...-AD7	45	112	M8x1

Ordering data
3/2-way valve, with silencer, supply voltage 24 V DC

Size	Part no.	Type
Cover plate		
MS9	**562940**	**MS9-EE-G-V24-S-VS**
Pneumatic connection 3 in NPT, cover plate		
MS9	**562946**	**MS9-EE-NG-V24-S-VS**

Ordering data – Modular product system

Ordering table Grid dimension [mm]	90	Conditions	Code		Enter code
Module no.	**562177**				
Series	Standard		**MS**		MS
Size	9		**9**		9
Function	On/off valve, electric		**-EE**		-EE
Pneumatic connection	Female thread G3/4	[1]	**-3/4**		
	Female thread G1	[1]	**-1**		
	Connecting plate G1/2		**-AGD**		
	Connecting plate G3/4		**-AGE**		
	Connecting plate G1		**-AGF**		
	Connecting plate G1 1/4		**-AGG**		
	Connecting plate G1 1/2		**-AGH**		
	Female thread 3/4 NPT	[1]	**-N3/4**		
	Female thread 1 NPT	[1]	**-N1**		
	Connecting plate 1/2 NPT	[1]	**-AQR**		
	Connecting plate 3/4 NPT	[1]	**-AQS**		
	Connecting plate 1 NPT	[1]	**-AQT**		
	Connecting plate 1 1/4 NPT	[1]	**-AQU**		
	Connecting plate 1 1/2 NPT	[1]	**-AQV**		
	Module without connecting thread, without connecting plate	[1]	**-G**		
	Module without connecting thread, without connecting plate (connection 3 in NPT)	[1]	**-NG**		
Supply voltage	24 V DC (plug pattern to EN 175301), 16 bar		**-V24**		
	24 V DC plug (plug pattern M12 to DESINA), 16 bar	[1]	**-V24P**		
	110 V AC (plug pattern to EN 175301), 16 bar	[1]	**-V110**		
	230 V AC (plug pattern to EN 175301), 16 bar	[1]	**-V230**		

[1] 3/4; 1, N3/4, N1, AQR, AQS, AQT, AQU, AQV, G, NG, V24P, V110, V230, AD7, WPM — Not with EU EX2 certification.

Ordering data – Modular product system

Ordering table Grid dimension [mm]	90	Conditions	Code		Enter code
Silencer	Silencer		**-S**		
Pressure gauge/pressure gauge alternatives	MS pressure gauge, bar		**-AG**		
	Cover plate		**-VS**		
	Adapter for EN pressure gauge 1/4, without pressure gauge		**-A4**		
	Integrated pressure gauge, red/green scale	[2]	**-RG**		
	Pressure sensor with status indicator, plug M8, threshold value comparator, PNP, N/O contact	[1] [3]	**-AD7**		
Alternative pressure gauge scale	psi	[4]	**-PSI**		
	MPa	[4]	**-MPA**		
	bar	[4]	**-BAR**		
Valve function	Standard (3/2-way valve)		**-**		
	2/2-way valve	[5]	**-2**		
Type of mounting	Mounting bracket standard design	[6]	**-WP**		
	Mounting bracket for hooking in service unit components	[1] [6]	**-WPM**		
	Mounting bracket for large wall gap	[6]	**-WPB**		
EU certification	II 3GD to EU Explosion Protection Directive (ATEX)		**-EX2**		
UL certification	cULus, ordinary location for Canada and USA	[7]	**-UL1**		
Flow direction	Flow direction from right to left		**-Z**		

[1] 3/4; 1, N3/4, N1, AQR, AQS, AQT, AQU, AQV, G, NG, V24P, V110, V230, AD7, WPM — Not with EU EX2 certification.
[2] RG — Not with alternative pressure gauge scale PSI, PSI scale is only used as an auxiliary scale.
[3] AD7 — Measuring range max. 10 bar.
[4] PSI, MPA, BAR — Not with adapter VS, A4, AD7.
[5] 2 — Not with silencer S.
[6] WP, WPM, WPB — Not with pneumatic connection G, NG.
[7] UL1 — Not with supply voltage V110, V230.

Peripherals overview

On/off valve MS12-EM

Note

Additional accessories:

- Module connector for combination with size MS9
  ➔ Internet: armv

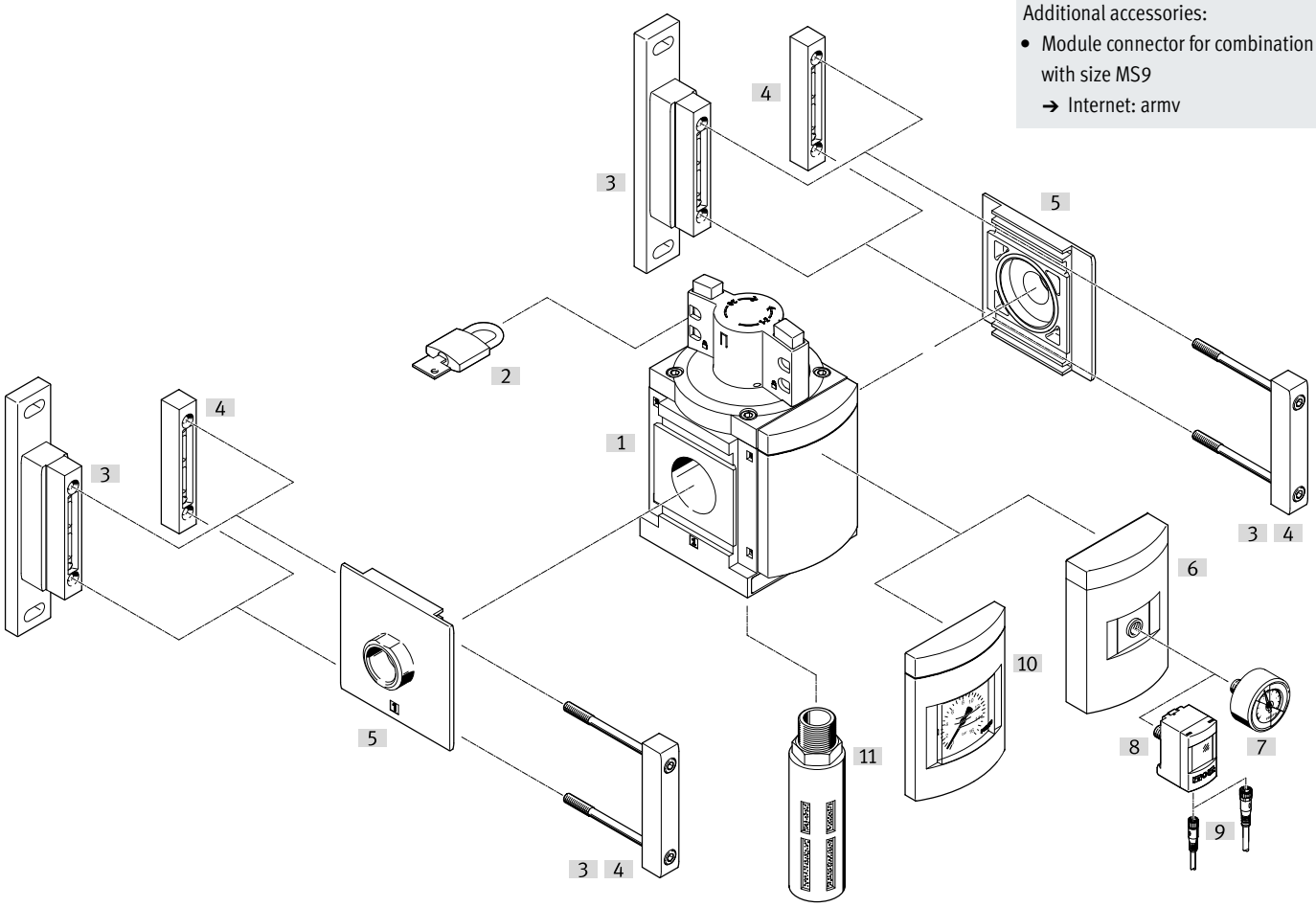

Mounting attachments and accessories		Order code	➔ Page/Internet
[1]	On/off valve	MS12-EM	80
Can be ordered via the modular product system			
[3]	Mounting bracket	[WP]	83
[5]	Connecting plate SET[1)]	[AG...]	
[6]	Adapter for EN pressure gauge 1/4	[A4]	
[10]	MS pressure gauge	[AG]	
[11]	Silencer	[S]	
Can be ordered as accessories			
[2]	Padlock	LRVS-D	103
[3]	Mounting bracket	MS12-WP	ms12-wp
[4]	Module connector	MS12-MV	ms12-mv
[5]	Connecting plate SET	MS12-AG...	ms12-ag
[7]	Pressure gauge	MA	103
[8]	Pressure sensor	SPAU-...-T-R14M	102
[9]	Connecting cable	NEBU-M8...-LE4, NEBU-M12...-LE4	103
[11]	Silencer	U	103

1) Module connector [4] is included in the scope of delivery.

Type codes

001	Series	
MS	MS series	

002	Size	
12	Grid dimension 124 mm	

003	Function	
EM	On/off valve, manual	

004	Pneumatic connection	
AGF	Sub-base G1	
AGG	Connecting plate G1 1/4	
AGH	Connecting plate G1 1/2	
AGI	Sub-base G2	
G	Module without connecting thread, without sub-base	

005	Silencer	
	None	
S	Silencer	

006	Pressure gauge alternatives	
	None	
AG	MS pressure gauge	
A4	Adapter for EN pressure gauge 1/4, without pressure gauge	

007	Alternative pressure gauge scale	
	MS pressure gauge	
PSI	psi	
MPA	MPa	

008	Type of mounting	
	Without mounting bracket	
WP	Mounting bracket basic design	

009	Flow direction	
	Flow direction from left to right	
Z	Flow direction from right to left	

Datasheet

Function:

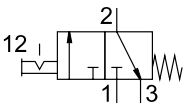

Flow rate
25000 ... 32000 l/min

Temperature range
–10 ... +60 °C

Operating pressure
0 ... 20 bar

www.festo.com

- Manually actuated on/off valve for pressurising and exhausting pneumatic systems
- Ducted exhaust is possible via a threaded connection with silencer
- The switching position is immediately recognisable
- Actuation is prevented by locking the rotary knob
- Commercially available padlock can be used for security

General technical data		
Pneumatic connection 1, 2		
Connecting plate	[AG...]	G1, G1 1/4, G1 1/2 or G2
Module without connecting thread/connecting plate	[G]	–
Pneumatic connection 3		G1
Design		Piston spool valve
Type of mounting		With accessories
		In-line installation
Mounting position		Any
Valve function		3/2-way valve, bistable
Exhaust function		Cannot be throttled
Switching position indication		Knob actuator direction = flow direction
Type of actuation		Direct
Flow direction		Not reversible

Note: This product conforms to ISO 1179-1 and ISO 228-1.

Standard nominal flow rate qnN[1] [l/min]	
In main flow direction 1 ➔ 2	25000 ... 32000
In relief direction 2 ➔ 3	13000

1) Measured at p1 = 6 bar and Δp = 1 bar.

Operating and environmental conditions		
Operating pressure	[bar]	0 ... 20
Operating medium		Compressed air to ISO 8573-1:2010 [–:–:–]
Ambient temperature	[°C]	–10 ... +60
Temperature of medium	[°C]	–10 ... +60
Corrosion resistance class	CRC[1]	2

1) More information www.festo.com/x/topic/crc

Datasheet

Weight [g]	
On/off valve	3900
On/off valve with silencer S	4000

Materials

Sectional view

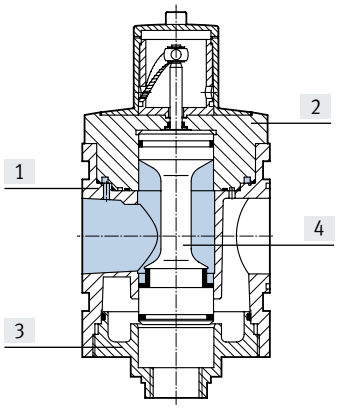

On/off valve		
[1]	Housing	Die-cast aluminium
[2]	Top cover	Aluminium
[3]	Bottom cover	Aluminium
[4]	Valve tappet	Stainless steel, POM, NBR
–	Springs	Steel
–	Covers/cover plates	PA
–	Seals	NBR
–	Connecting plate, module connector, mounting bracket	Die-cast aluminium
LABS (PWIS) conformity		VDMA24364-B1/B2-L

Dimensions – Basic version

Download CAD data ➔ www.festo.com

Module without connecting thread, without connecting plate G, with cover plate

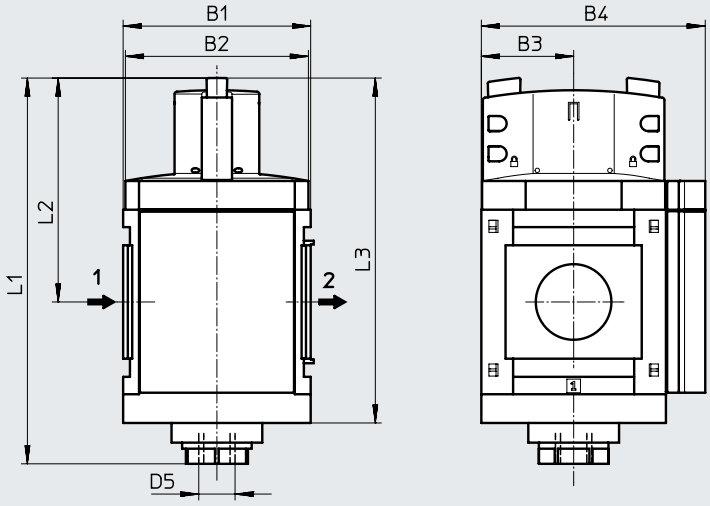

➔ Flow direction

Type	B1	B2	B3	B4	L1	L2	L3	D5
MS12-EM-G	124	122	61	148	255	148	228	G1

Datasheet

Dimensions – Silencer Download CAD data ➔ www.festo.com

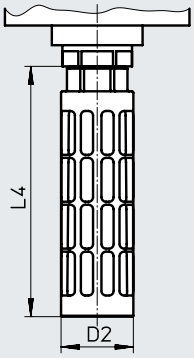

Type	D2 ø	L4
MS12-EM-...-S	47.8	165.5

Dimensions – Pressure gauges/pressure gauge alternatives Download CAD data ➔ www.festo.com

[AG] Integrated MS pressure gauge with standard scale, display unit [bar]

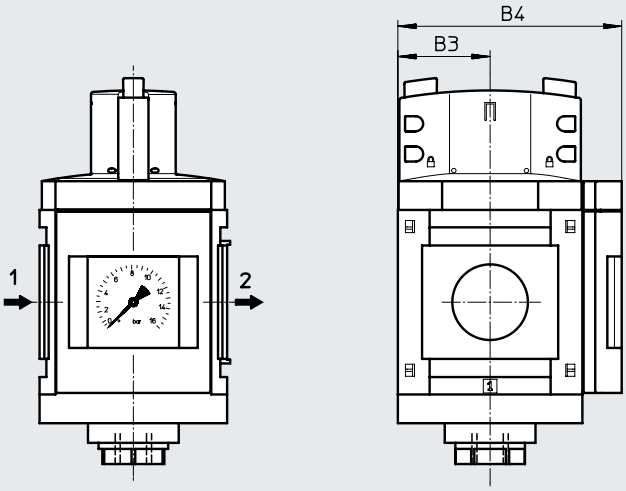

➔ Flow direction

[A4] Adapter for EN pressure gauge 1/4, without pressure gauge

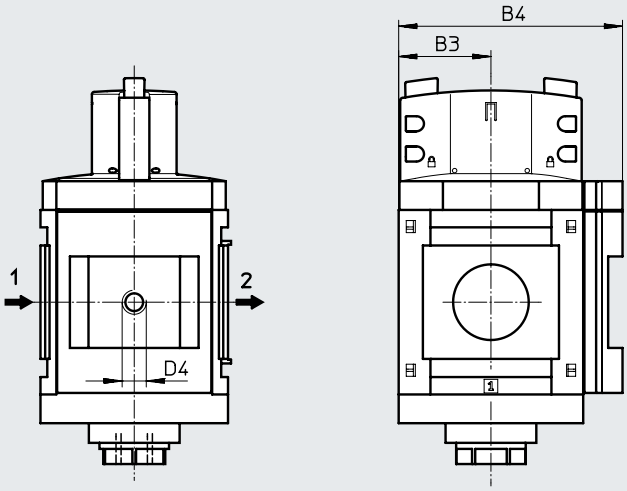

➔ Flow direction

Type	B3	B4	D4
MS12-EM-...-AG	61	148	–
MS12-EM-...-A4	61	148	G1/4

Note: This product conforms to ISO 1179-1 and ISO 228-1.

Ordering data

Size	Part no.	Type
MS12	**541495**	**MS12-EM-G**

Ordering data – Modular product system

Ordering table Grid dimension [mm]	124	Conditions	Code		Enter code
Module no.	**535031**				
Series	Standard		**MS**		MS
Size	12		**12**		12
Function	On/off valve, manual		**-EM**		-EM
Pneumatic connection	Connecting plate G1		**-AGF**		
	Connecting plate G1 1/4		**-AGG**		
	Connecting plate G1 1/2		**-AGH**		
	Connecting plate G2		**-AGI**		
	Module without connecting thread, without connecting plate		**-G**		
Silencer	Silencer		**-S**		
Pressure gauge/pressure gauge alternatives	MS pressure gauge, bar		**-AG**		
	Adapter for EN pressure gauge 1/4, without pressure gauge		**-A4**		
Alternative pressure gauge scale	psi	[1]	**-PSI**		
	MPa	[1]	**-MPA**		
Type of mounting	Mounting bracket standard design	[2]	**-WP**		
Flow direction	Flow direction from right to left		**-Z**		

[1] PSI, MPA Only with pressure gauge AG
[2] WP Only with connecting plate AGF, AGG, AGH or AGI.

Peripherals overview

On/off valve MS12-EE

Note

Additional accessories:

- Module connector for combination with size MS9
  ➔ Internet: armv

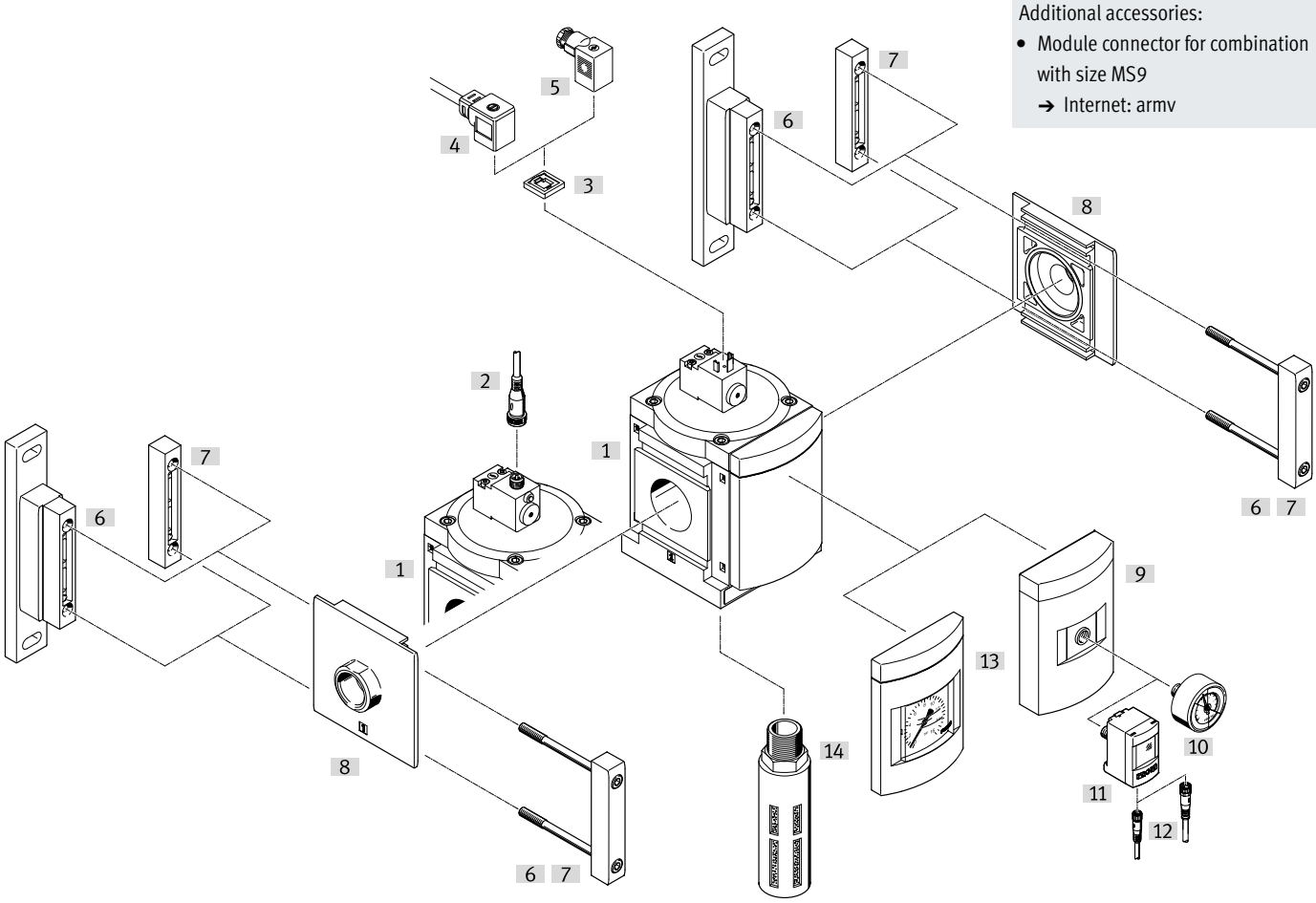

Mounting attachments and accessories		Order code	➔ Page/Internet
[1]	On/off valve	MS12-EE	86
Can be ordered via the modular product system			
[6]	Mounting bracket	[WP]	89
[8]	Connecting plate SET[1)]	[AG...]	
[9]	Adapter for EN pressure gauge 1/4	[A4]	
[13]	MS pressure gauge	[AG]	
[14]	Silencer	[S]	
Can be ordered as accessories			
[2]	Connecting cable	NEBU-M12...-LE4	103
[3]	Illuminating seal	MC-LD	102
[4]	Connecting cable	KMC	102
[5]	Plug socket	MSSD-C	102
[6]	Mounting bracket	MS12-WP	ms12-wp
[7]	Module connector	MS12-MV	ms12-mv
[8]	Connecting plate SET	MS12-AG...	ms12-ag
[10]	Pressure gauge	MA	103
[11]	Pressure sensor	SPAU-...-T-R14M	102
[12]	Connecting cable	NEBU-M8...-LE4, NEBU-M12...-LE4	103
[14]	Silencer	U	103

1) Module connector [7] is included in the scope of delivery.

Type codes

001	Series	
MS	MS series	

002	Size	
12	Grid dimension 124 mm	

003	Function	
EE	On/off valve, electric	

004	Pneumatic connection	
AGF	Sub-base G1	
AGG	Connecting plate G1 1/4	
AGH	Connecting plate G1 1/2	
AGI	Sub-base G2	
G	Module without connecting thread, without sub-base	

005	Supply voltage	
V110	110 V AC (connection pattern to EN 175301)	
V230	230 V AC (connection pattern to EN 175301)	
V24	24 V DC (connection pattern to EN 175301)	
V24P	24 V DC plug (connection pattern M12 to DESINA)	

006	Silencer	
	None	
S	Silencer	

007	Pressure gauge alternatives	
	None	
AG	MS pressure gauge	
A4	Adapter for EN pressure gauge 1/4, without pressure gauge	

008	Alternative pressure gauge scale	
	MS pressure gauge	
PSI	psi	
MPA	MPa	

009	Type of mounting	
	Without mounting bracket	
WP	Mounting bracket basic design	

010	Flow direction	
	Flow direction from left to right	
Z	Flow direction from right to left	

Datasheet

Function:

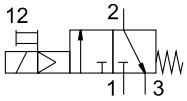

Flow rate
25000 ... 32000 l/min

Temperature range
–10 ... +50 °C

Operating pressure
3 ... 16 bar

www.festo.com

- Electrically actuated on/off valve for pressurising and exhausting pneumatic systems
- With solenoid coil, without plug socket
- Choice of three voltage ranges
- Ducted exhaust is possible via a threaded connection with silencer
- Detenting and non-detenting manual override

General technical data		
Pneumatic connection 1, 2		
Connecting plate	[AG...]	G1, G1 1/4, G1 1/2 or G2
Module without connecting thread/connecting plate	[G]	–
Pneumatic connection 3		G1
Design		Piston spool valve
Type of mounting		With accessories
		In-line installation
Mounting position		Any
Valve function		3/2-way valve, single solenoid, closed
Exhaust function		Cannot be throttled
Reset method		Mechanical spring
Switching position indication		With accessories
		LED (with variant V24P)
Type of actuation		Piloted
Pilot air supply		Internal
Flow direction		Not reversible

Note: This product conforms to ISO 1179-1 and ISO 228-1.

Electrical data		
Characteristic coil data		
With supply voltage	[V24], [V24P]	24 V DC: 4.5 W, permissible voltage fluctuations ±10%
	[V110]	110 V AC: 50 Hz, pick-up power 11.5 W, holding power 8.9 W, permissible voltage fluctuations ±10%
		110 V AC: 60 Hz, pick-up power 9.5 W, holding power 6.2 W, permissible voltage fluctuations ±10%
	[V230]	230 V AC: 50 Hz, pick-up power 11.5 W, holding power 9.1 W, permissible voltage fluctuations ±10%
		230 V AC: 60 Hz, pick-up power 9.5 W, holding power 6.4 W, permissible voltage fluctuations ±10%
Electrical connection		
With supply voltage	[V24], [V110], [V230]	Plug, square design to EN 175301-803, type A
	[V24P]	M12 plug, 4-pin to DESINA
Degree of protection for solenoid coil		IP65
Duty cycle	[%]	100

Standard nominal flow rate qnN[1] [l/min]	
In main flow direction 1 → 2	25000 ... 32000
In relief direction 2 → 3	8900

1) Measured at p1 = 6 bar and Δp = 1 bar.

Datasheet

Operating and environmental conditions		
Operating pressure	[bar]	3 ... 16
Operating medium		Compressed air to ISO 8573-1:2010 [7:4:4]
		Inert gases
Note on the operating/pilot medium		Lubricated operation possible (in which case lubricated operation will always be required)
Ambient temperature	[°C]	–10 ... +50
Temperature of medium	[°C]	–10 ... +50
Corrosion resistance class	CRC[1)]	2

1) Corrosion resistance class CRC 2 to Festo standard FN 940070
Moderate corrosion stress. Indoor applications in which condensation can occur. External visible parts with primarily decorative surface requirements that are in direct contact with a normal industrial environment.

Weight [g]	
On/off valve	3800
On/off valve with silencer S	3900

Materials

Sectional view

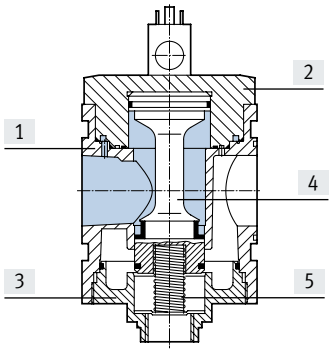

On/off valve		
[1]	Housing	Die-cast aluminium
[2]	Top cover	Aluminium
[3]	Bottom cover	Aluminium
[4]	Valve tappet	Stainless steel, POM, NBR
[5]	Springs	Steel
–	Covers/cover plates	PA
–	Seals	NBR
–	Connecting plate, module connector, mounting bracket	Die-cast aluminium
LABS (PWIS) conformity		VDMA24364-B1/B2-L

Dimensions – Basic version

Download CAD data ➔ www.festo.com

[G] Module without connecting thread, without connecting plate, with cover plate

[V24], [V110], [V230] Supply voltage

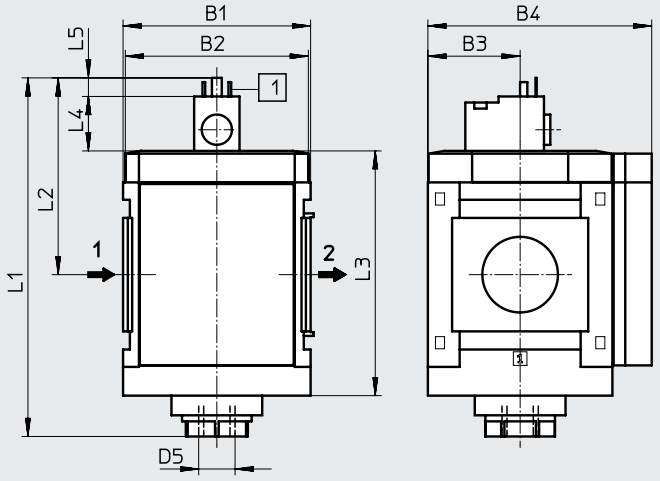

[V24P] Supply voltage

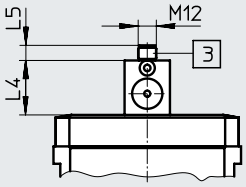

1 = Connected to 2
2 = Connected to 1
3 = com (–)
4 = Signal (+)

[1] Plug connection to EN 175301-803

[2] Plug connection M12, 4-pin to DESINA for connecting cable NEBU-M12

➔ Flow direction

Type	B1	B2	B3	B4	L1	L2	L3	L4	L5	D5
MS12-EE-G-V24, V110, V230	124	122	61	148	237	130	162	35.7	12.3	G1
MS12-EE-G-V24P								36	10	

Datasheet

Dimensions – Silencer Download CAD data ➔ www.festo.com

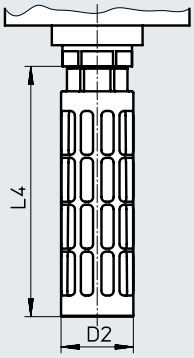

Type	D2 ø	L4
MS12-EE-...-S	47.8	165.5

Dimensions – Pressure gauges/pressure gauge alternatives Download CAD data ➔ www.festo.com

[AG] Integrated MS pressure gauge with standard scale, display unit [bar]

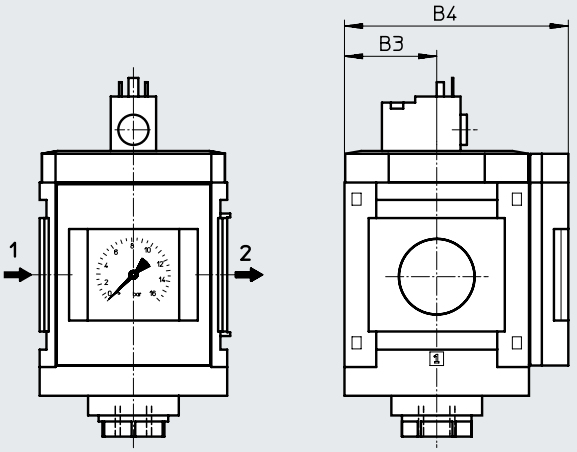

➔ Flow direction

[A4] Adapter for EN pressure gauge 1/4, without pressure gauge

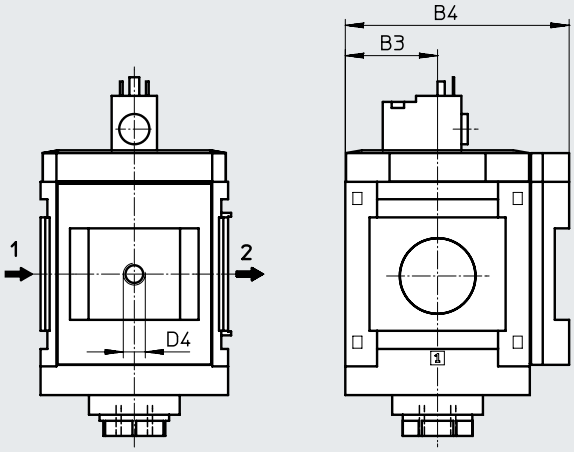

➔ Flow direction

Type	B3	B4	D4
MS12-EE-...-AG	61	148	–
MS12-EE-...-A4	61	148	G1/4

Note: This product conforms to ISO 1179-1 and ISO 228-1.

Ordering data

Size	Supply voltage 24 V DC	
	Part no.	Type
MS12	**541496**	**MS12-EE-G-V24**

Ordering data – Modular product system

Ordering table Grid dimension [mm]	124	Conditions	Code		Enter code
Module no.	**535032**				
Series	Standard		**MS**		MS
Size	12		**12**		12
Function	On/off valve, electric		**-EE**		-EE
Pneumatic connection	Connecting plate G1		**-AGF**		
	Connecting plate G1 1/4		**-AGG**		
	Connecting plate G1 1/2		**-AGH**		
	Connecting plate G2		**-AGI**		
	Module without connecting thread, without connecting plate		**-G**		
Supply voltage	24 V DC (plug pattern to EN 175301), 16 bar		**-V24**		
	24 V DC plug (plug pattern M12 to DESINA), 16 bar		**-V24P**		
	110 V AC (plug pattern to EN 175301), 16 bar		**-V110**		
	230 V AC (plug pattern to EN 175301), 16 bar		**-V230**		
Silencer	Silencer		**-S**		
Pressure gauge/pressure gauge alternatives	MS pressure gauge, bar		**-AG**		
	Adapter for EN pressure gauge 1/4, without pressure gauge		**-A4**		
Alternative pressure gauge scale	psi	[1]	**-PSI**		
	MPa	[1]	**-MPA**		
Type of mounting	Mounting bracket standard design	[2]	**-WP**		
Flow direction	Flow direction from right to left		**-Z**		

[1] PSI, MPA Only with pressure gauge AG
[2] WP Only with connecting plate AGF, AGG, AGH or AGI.

Peripherals overview

Soft-start valve MS12-DL

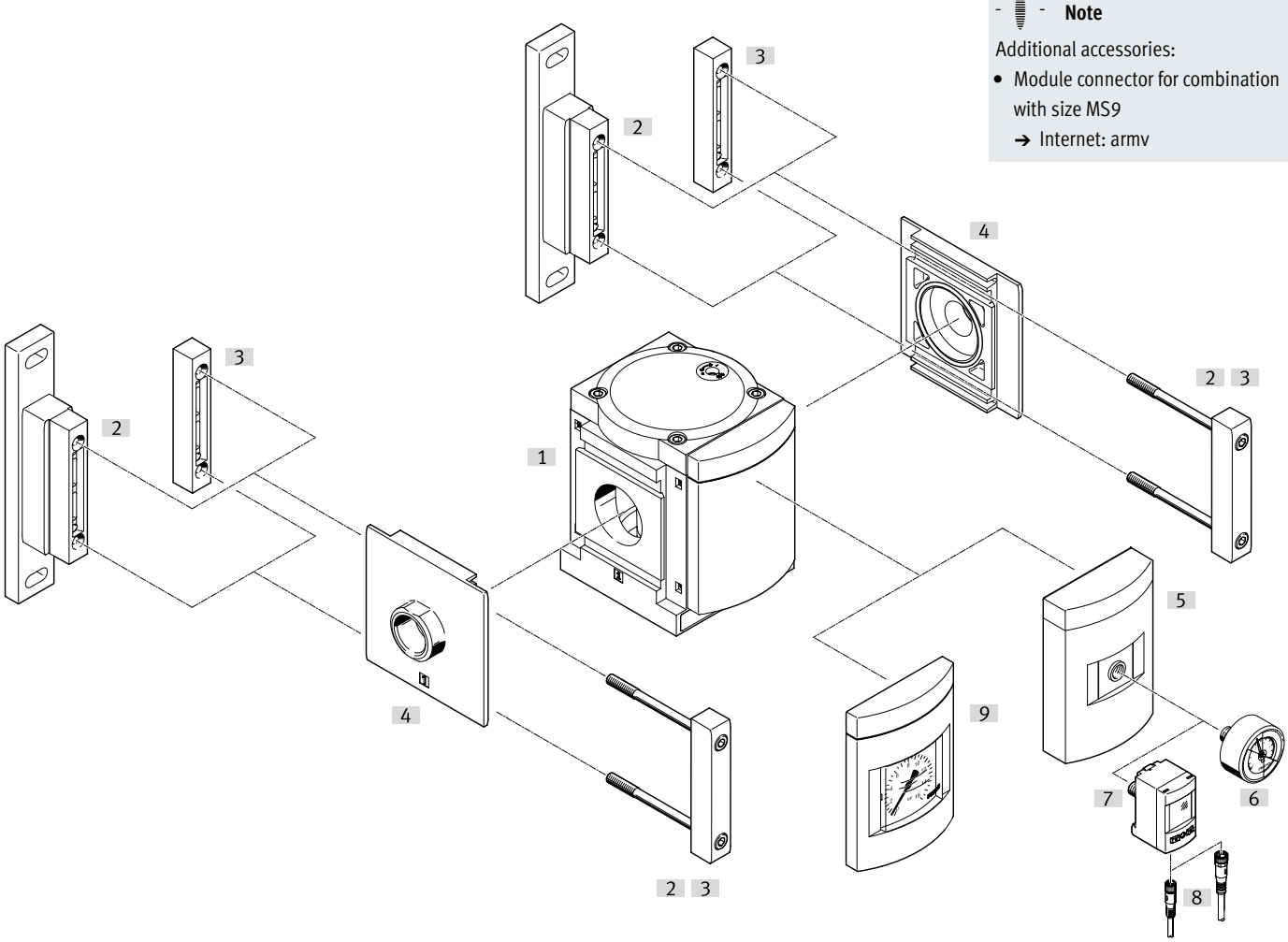

Note

Additional accessories:

- Module connector for combination with size MS9
  ➔ Internet: armv

Mounting attachments and accessories			
		Order code	➔ Page/Internet
[1]	Soft-start valve	MS12-DL	92
Can be ordered via the modular product system			
[2]	Mounting bracket	[WP]	95
[4]	Connecting plate SET[1)]	[AG...]	
[5]	Adapter for EN pressure gauge 1/4	[A4]	
[9]	MS pressure gauge	[AG]	
Can be ordered as accessories			
[2]	Mounting bracket	MS12-WP	ms12-wp
[3]	Module connector	MS12-MV	ms12-mv
[4]	Connecting plate SET	MS12-AG...	ms12-ag
[6]	Pressure gauge	MA	103
[7]	Pressure sensor	SPAU-...-T-R14M	102
[8]	Connecting cable	NEBU-M8...-LE4, NEBU-M12...-LE4	103

1) Module connector [3] is included in the scope of delivery.

Type codes

001	Series	
MS	MS series	

002	Size	
12	Grid dimension 124 mm	

003	Function	
DL	Soft-start valve, pneumatic	

004	Pneumatic connection	
AGF	Sub-base G1	
AGG	Connecting plate G1 1/4	
AGH	Connecting plate G1 1/2	
AGI	Sub-base G2	
G	Module without connecting thread, without sub-base	

005	Pressure gauge alternatives	
	None	
AG	MS pressure gauge	
A4	Adapter for EN pressure gauge 1/4, without pressure gauge	

006	Alternative pressure gauge scale	
	MS pressure gauge	
PSI	psi	
MPA	MPa	

007	Type of mounting	
	Without mounting bracket	
WP	Mounting bracket basic design	

008	UL certification	
	None	
UL1	cULus ordinary location for Canada and USA	

009	Flow direction	
	Flow direction from left to right	
Z	Flow direction from right to left	

Datasheet

Function:

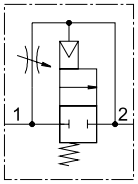

Flow rate
25000 ... 42000 l/min

Temperature range
–10 ... +60 °C

Operating pressure
2 ... 20 bar

www.festo.com

The duration of the pressure build-up is set using the restrictor attached to the valve cap.

The output pressure p2 rises slowly in accordance with the restrictor setting. The main seat opens when the switch-through pressure is reached.

- Pneumatically actuated soft-start valve for slowly pressurising and exhausting pneumatic systems (for use with on/off valves EM and EE)
- The drives move slowly and reliably into the initial position
- Sudden and erratic movements are avoided
- Main seat opening at approx. 50% of operating pressure
- Adjustable switching time delay

General technical data		
Pneumatic connection 1, 2		
Connecting plate	[AG...]	G1, G1 1/4, G1 1/2 or G2
Module without connecting thread/connecting plate	[G]	–
Design		Piston seat
Type of mounting		With accessories
		In-line installation
Mounting position		Any
Valve function		2/2-way valve
Exhaust function		Can be throttled
Reset method		Mechanical spring
Type of actuation		Direct
Pilot air supply		Internal
Flow direction		Not reversible

Note: This product conforms to ISO 1179-1 and ISO 228-1.

Standard nominal flow rate qnN[1] [l/min]	
In main flow direction 1 → 2	25000 ... 42000
In relief direction 2 → 1	25000 ... 42000

1) Measured at p1 = 6 bar and p2 = 5 bar, Δp = 1 bar.

Datasheet

Operating and environmental conditions		
Operating pressure	[bar]	2 ... 20
Operating medium		Compressed air to ISO 8573-1:2010 [7:–:–]
Ambient temperature	[°C]	–10 ... +60
Temperature of medium	[°C]	–10 ... +60
Corrosion resistance class	CRC[1)]	2

1) More information www.festo.com/x/topic/crc

Weight [g]	
Soft-start valve	3600

Materials

Sectional view

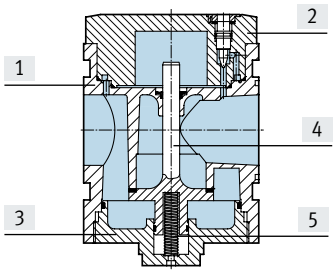

Soft-start valve		
[1]	Housing	Die-cast aluminium
[2]	Top cover	Aluminium
[3]	Bottom cover	Aluminium
[4]	Valve tappet	Aluminium, NBR
[5]	Springs	Steel
–	Covers/cover plates	PA
–	Seals	NBR
–	Connecting plate, module connector, mounting bracket	Die-cast aluminium
LABS (PWIS) conformity		VDMA24364-B1/B2-L

Switching point – Pressure p as a function of time t

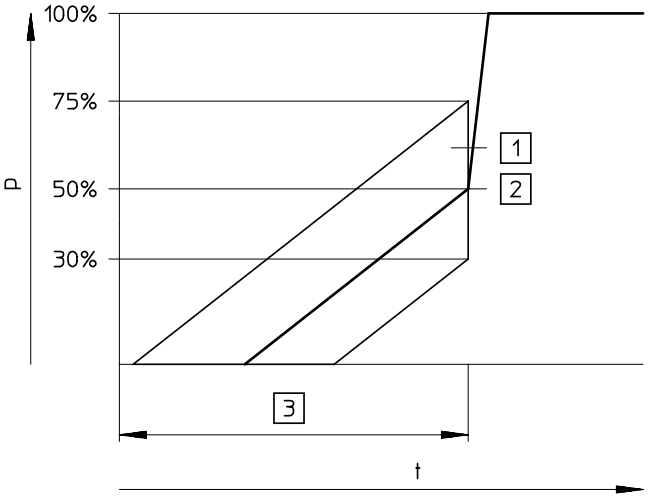

[1] Tolerance range
[2] Switching point
[3] Filling time is adjustable via a restrictor

Note

The +25%/–20% switching point tolerance refers to the operating pressure p1.
Example: A switching point from 1.2 bar to 3.0 bar is permissible at an operating pressure of 4 bar.

Datasheet

Dimensions – Basic version Download CAD data ➔ www.festo.com

[G] Module without connecting thread, without connecting plate, with cover plate

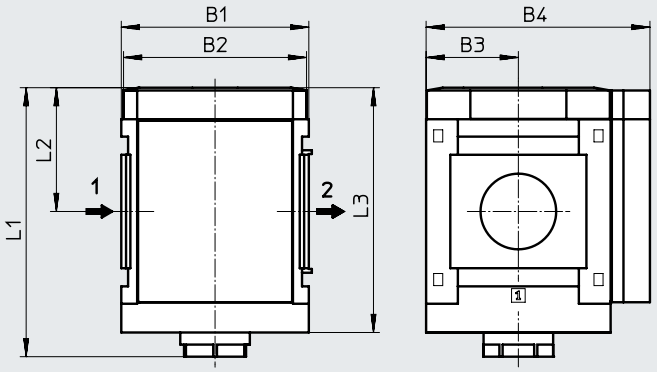

➔ Flow direction

Type	B1	B2	B3	B4	L1	L2	L3
MS12-DL-G	124	122	61	148	178	82	162

Dimensions – Pressure gauges/pressure gauge alternatives Download CAD data ➔ www.festo.com

[AG] Integrated MS pressure gauge with standard scale, display unit [bar]

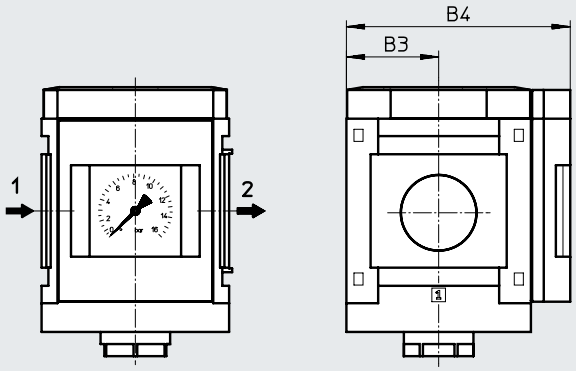

➔ Flow direction

[A4] Adapter for EN pressure gauge 1/4, without pressure gauge

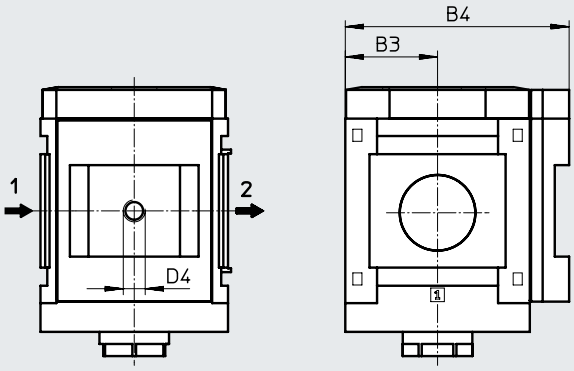

➔ Flow direction

Type	B3	B4	D4
MS12-DL-...-AG	61	148	–
MS12-DL-...-A4	61	148	G1/4

Note: This product conforms to ISO 1179-1 and ISO 228-1.

Ordering data

Size	Part no.	Type
MS12	**541497**	**MS12-DL-G**

Ordering data – Modular product system

Ordering table Grid dimension [mm]	124	Conditions	Code		Enter code
Module no.	**535033**				
Series	Standard		**MS**		MS
Size	12		**12**		12
Function	Soft-start valve, pneumatic		**-DL**		-DL
Pneumatic connection	Connecting plate G1		**-AGF**		
	Connecting plate G1 1/4		**-AGG**		
	Connecting plate G1 1/2		**-AGH**		
	Connecting plate G2		**-AGI**		
	Module without connecting thread, without connecting plate		**-G**		
Pressure gauge/pressure gauge alternatives	MS pressure gauge, bar		**-AG**		
	Adapter for EN pressure gauge 1/4, without pressure gauge		**-A4**		
Alternative pressure gauge scale	psi	[1]	**-PSI**		
	MPa	[1]	**-MPA**		
Type of mounting	Mounting bracket standard design	[2]	**-WP**		
Flow direction	Flow direction from right to left		**-Z**		

[1] PSI, MPA Only with pressure gauge AG
[2] WP Only with connecting plate AGF, AGG, AGH or AGI.

Peripherals overview

Soft-start valve MS12-DE

Note

Additional accessories:

- Module connector for combination with size MS9
  ➔ Internet: armv

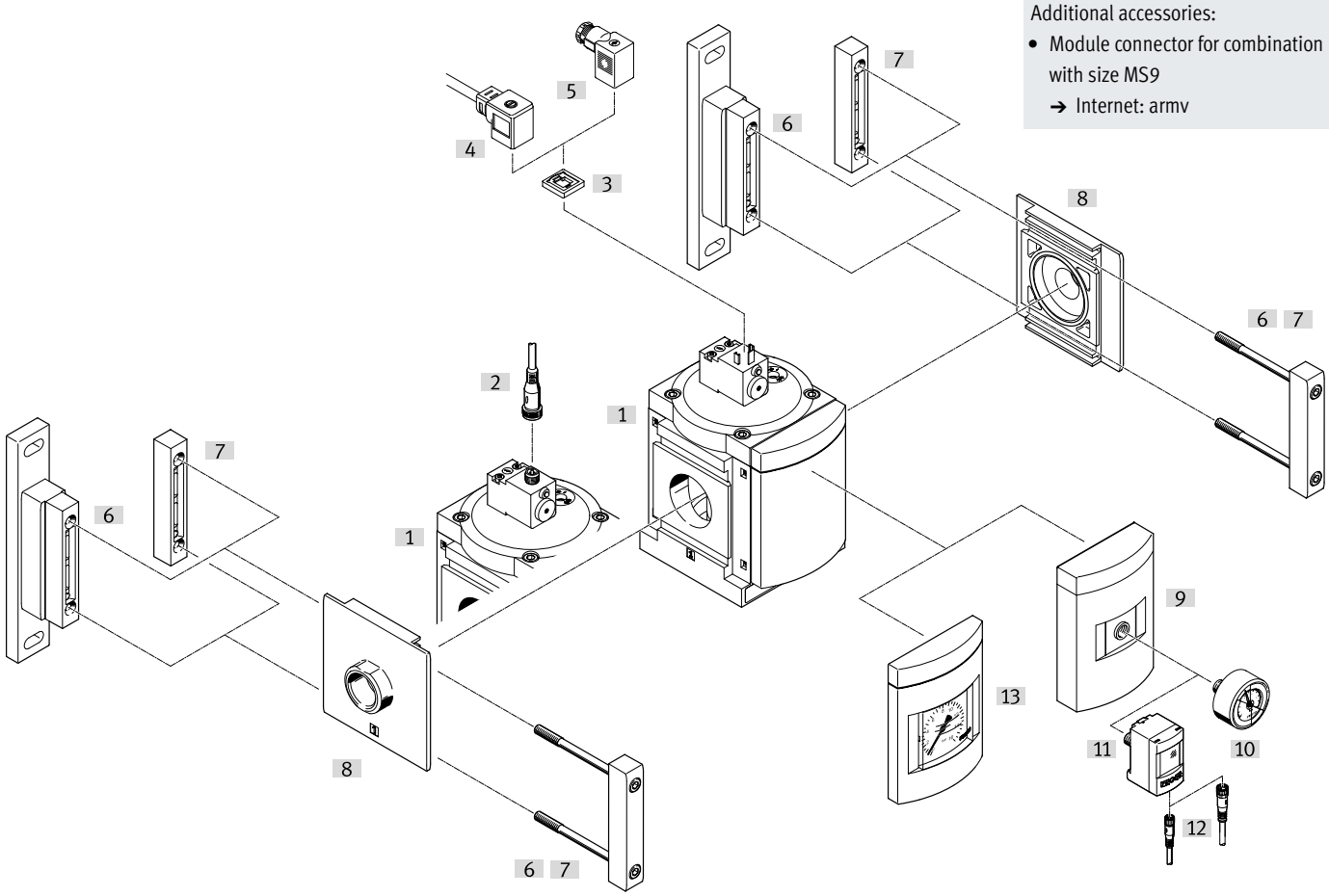

Mounting attachments and accessories		Order code	➔ Page/Internet
[1]	Soft-start valve	MS12-DE	98
Can be ordered via the modular product system			
[6]	Mounting bracket	[WP]	101
[8]	Connecting plate SET[1)]	[AG...]	
[9]	Adapter for EN pressure gauge 1/4	[A4]	
[13]	MS pressure gauge	[AG]	
Can be ordered as accessories			
[2]	Connecting cable	NEBU-M12...-LE4	103
[3]	Illuminating seal	MC-LD	102
[4]	Connecting cable	KMC	102
[5]	Plug socket	MSSD-C	102
[6]	Mounting bracket	MS12-WP	ms12-wp
[7]	Module connector	MS12-MV	ms12-mv
[8]	Connecting plate SET	MS12-AG...	ms12-ag
[10]	Pressure gauge	MA	103
[11]	Pressure sensor	SPAU-...-T-R14M	102
[12]	Connecting cable	NEBU-M8...-LE4, NEBU-M12...-LE4	103

1) Module connector [7] is included in the scope of delivery.

Type codes

001	Series	
MS	MS series	

002	Size	
12	Grid dimension 124 mm	

003	Function	
DE	Soft-start valve, electric	

004	Pneumatic connection	
AGF	Sub-base G1	
AGG	Connecting plate G1 1/4	
AGH	Connecting plate G1 1/2	
AGI	Sub-base G2	
G	Module without connecting thread, without sub-base	

005	Supply voltage	
V110	110 V AC (connection pattern to EN 175301)	
V230	230 V AC (connection pattern to EN 175301)	
V24	24 V DC (connection pattern to EN 175301)	
V24P	24 V DC plug (connection pattern M12 to DESINA)	

006	Pressure gauge alternatives	
	None	
AG	MS pressure gauge	
A4	Adapter for EN pressure gauge 1/4, without pressure gauge	

007	Alternative pressure gauge scale	
	MS pressure gauge	
PSI	psi	
MPA	MPa	

008	Type of mounting	
	Without mounting bracket	
WP	Mounting bracket basic design	

009	Flow direction	
	Flow direction from left to right	
Z	Flow direction from right to left	

Datasheet

Function:

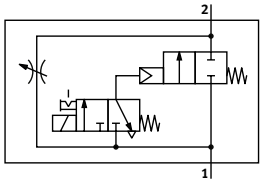

Flow rate
25000 ... 42000 l/min

Temperature range
–10 ... +50 °C

Operating pressure
3 ... 16 bar

www.festo.com

The duration of the pressure build-up is set using the restrictor attached to the valve cap.
The output pressure p2 rises slowly in accordance with the restrictor setting.
While the solenoid valve is not actuated, only the flow rate of the flow control valve is available. The main seat is only opened when the solenoid valve is energised.

When the solenoid valve is switched off, the main seat is closed and only the flow rate of the flow control valve is available.
When exhausting a system, the solenoid valve should remain switched on; this increases the volume flow from 2 to 1 and shortens the exhaust time.

- Electrically actuated soft-start valve for slowly pressurising and exhausting pneumatic systems
- The drives move slowly and reliably into the initial position
- Sudden and erratic movements are avoided
- With solenoid coil, without plug socket
- The switching pressure can be precisely controlled with a solenoid valve
- Adjustable switching time delay
- Choice of three voltage ranges
- Detenting and non-detenting manual override

General technical data		
Pneumatic connection 1, 2		
Connecting plate	[AG...]	G1, G1 1/4, G1 1/2 or G2
Module without connecting thread/connecting plate	[G]	–
Pneumatic connection 3		G1
Design		Piston seat
Type of mounting		With accessories
		In-line installation
Mounting position		Any
Valve function		2/2-way valve
Exhaust function		Can be throttled
Reset method		Mechanical spring
Signal status display		With accessories
		LED (with variant V24P)
Type of actuation		Piloted
Pilot air supply		Internal
Flow direction		Not reversible

Note: This product conforms to ISO 1179-1 and ISO 228-1.

Electrical data		
Characteristic coil data		
With supply voltage	[V24]	24 V DC: 8.4 W
		42 V AC: 50 Hz, pick-up power 14 VA, holding power 10 VA
		42 V AC: 60 Hz, pick-up power 12 VA, holding power 7 VA
	[V24P]	24 V DC
	[V110]	110 V AC
	[V230]	230 V AC
Electrical connection		
With supply voltage	[V24], [V110], [V230]	Plug, square design to EN 175301-803, type A
	[V24P]	M12 plug, 4-pin to DESINA
Degree of protection for solenoid coil		IP65
Duty cycle	[%]	100

Datasheet

Standard nominal flow rate qnN[1] [l/min]	
In main flow direction 1 ➔ 2	25000 ... 42000
In relief direction 2 ➔ 1[2]	25000 ... 42000

1) Measured at p1 = 6 bar and p2 = 5 bar, Δp = 1 bar.
2) With energised solenoid valve.

Operating and environmental conditions		
Operating pressure	[bar]	3 ... 16
Operating medium		Compressed air to ISO 8573-1:2010 [–:–:–]
Ambient temperature	[°C]	–10 ... +50
Temperature of medium	[°C]	–10 ... +50
CE marking (see declaration of conformity)[1]		To EU Low Voltage Directive
UKCA marking (see declaration of conformity)[1]		To UK regulations for electrical equipment
Corrosion resistance class	CRC[2]	2

1) More information: www.festo.com/catalogue/ms12-de ➔ Support/Downloads.
2) More information www.festo.com/x/topic/crc

Weight [g]	
Soft-start valve	3800

Materials

Sectional view

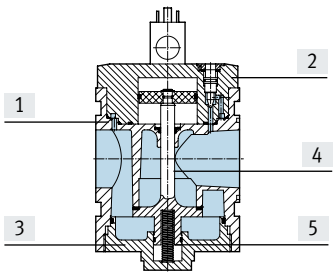

Soft-start valve		
[1]	Housing	Die-cast aluminium
[2]	Top cover	Aluminium
[3]	Bottom cover	Aluminium
[4]	Valve tappet	Aluminium, NBR
[5]	Springs	Steel
–	Covers/cover plates	PA
–	Seals	NBR
–	Connecting plate, module connector, mounting bracket	Die-cast aluminium
LABS (PWIS) conformity		VDMA24364-B1/B2-L

Datasheet

Dimensions – Basic version Download CAD data ➔ www.festo.com

[G] Module without connecting thread, without connecting plate, with cover plate

[V24], [V110], [V230] Supply voltage

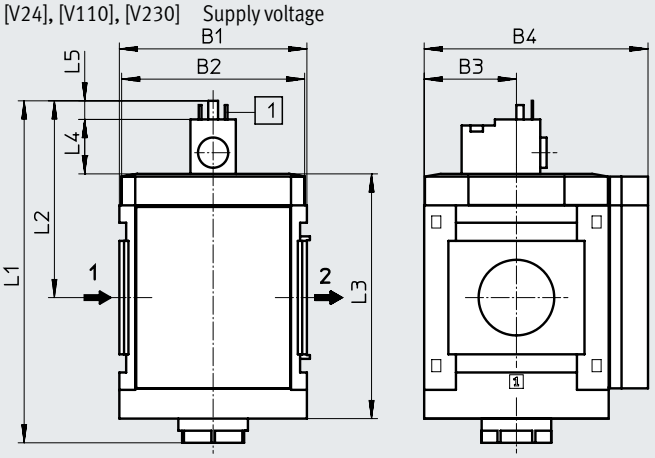

[V24P] Supply voltage

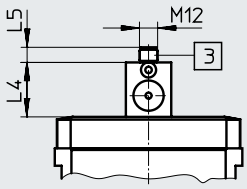

1 = Connected to 2
2 = Connected to 1
3 = com (–)
4 = Signal (+)

[1] Plug connection to EN 175301-803

[2] Plug connection M12, 4-pin to DESINA for connecting cable NEBU-M12

➔ Flow direction

Type	B1	B2	B3	B4	L1	L2	L3	L4	L5
MS12-DE-G-V24, V110, V230	124	122	61	148	226	130	162	35.7	12.3
MS12-DE-G-V24P								36	10

Dimensions – Pressure gauges/pressure gauge alternatives Download CAD data ➔ www.festo.com

[AG] Integrated MS pressure gauge with standard scale, display unit [bar]

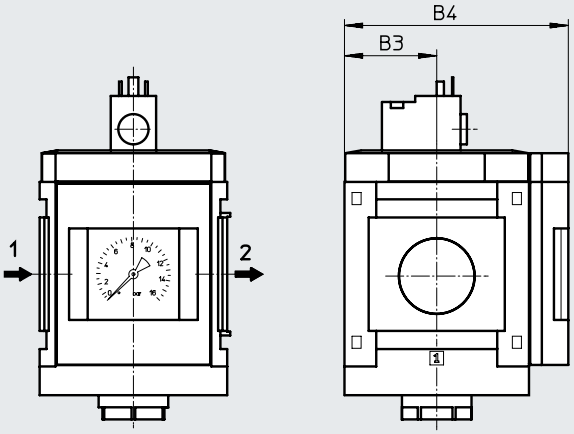

➔ Flow direction

[A4] Adapter for EN pressure gauge 1/4, without pressure gauge

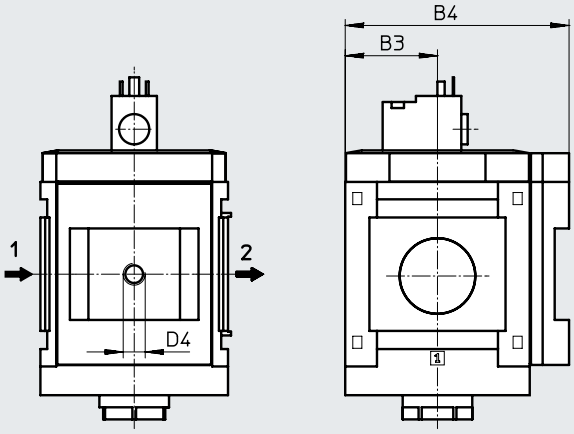

➔ Flow direction

Type	B3	B4	D4
MS12-DE-...-AG	61	148	–
MS12-DE-...-A4	61	148	G1/4

Note: This product conforms to ISO 1179-1 and ISO 228-1.

Ordering data

Size	Supply voltage 24 V DC	
	Part no.	Type
MS12	**541498**	**MS12-DE-G-V24**

Ordering data – Modular product system

Ordering table Grid dimension [mm]	124	Conditions	Code		Enter code
Module no.	**535034**				
Series	Standard		**MS**		MS
Size	12		**12**		12
Function	Soft-start valve, electric		**-DE**		-DE
Pneumatic connection	Connecting plate G1		**-AGF**		
	Connecting plate G1 1/4		**-AGG**		
	Connecting plate G1 1/2		**-AGH**		
	Connecting plate G2		**-AGI**		
	Module without connecting thread, without connecting plate		**-G**		
Supply voltage	24 V DC (plug pattern to EN 175301), 16 bar		**-V24**		
	24 V DC plug (plug pattern M12 to DESINA), 16 bar		**-V24P**		
	110 V AC (plug pattern to EN 175301), 16 bar		**-V110**		
	230 V AC (plug pattern to EN 175301), 16 bar		**-V230**		
Pressure gauge/pressure gauge alternatives	MS pressure gauge, bar		**-AG**		
	Adapter for EN pressure gauge 1/4, without pressure gauge		**-A4**		
Alternative pressure gauge scale	psi	[1]	**-PSI**		
	MPa	[1]	**-MPA**		
Type of mounting	Mounting bracket standard design	[2]	**-WP**		
Flow direction	Flow direction from right to left		**-Z**		

[1] PSI, MPA Only with pressure gauge AG
[2] WP Only with connecting plate AGF, AGG, AGH or AGI.

Accessories

Ordering data – Plug socket MSSD

Datasheets ➔ Internet: mssd

	Description		Electrical connection	Cable connection	Part no.	Type
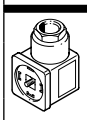	For MS4/6-EE/DE	–	3-pin	Screw terminal	★ **151687**	**MSSD-EB**
			4-pin	Insulation displacement connector	**192745**	**MSSD-EB-S-M14**
		For use in explosion protection areas	3-pin	Screw terminal	**570367**	**MSSD-EB-M12-24VDC-SD-EX**
	For MS9-EE, For MS12-EE/DE	–	3-pin	Screw terminal	**34583**	**MSSD-C**
			4-pin	Insulation displacement connector	**192748**	**MSSD-C-S-M16**

Ordering data – Plug socket with cable KMEB/Connecting cable KMC

Datasheets ➔ Internet: kmeb, kmc

	Description	Operating voltage	Electrical connection	Switching status indication	Cable length [m]	Part no.	Type
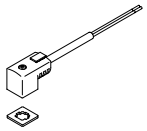	For MS4/6-EE/DE	24 V DC	2-pin	LED	2.5	**547268**	**KMEB-3-24-2.5-LED**
					5	**547269**	**KMEB-3-24-5-LED**
				–	2.5	**547270**	**KMEB-3-24-2.5**
					5	**547271**	**KMEB-3-24-5**
			3-pin	LED	2.5	★ **151688**	**KMEB-1-24-2.5-LED**
					5	**151689**	**KMEB-1-24-5-LED**
					10	**193457**	**KMEB-1-24-10-LED**
		230 V AC	3-pin	–	2.5	**151690**	**KMEB-1-230AC-2.5**
					5	**151691**	**KMEB-1-230AC-5**
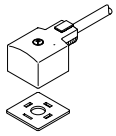	For MS9-EE, For MS12-EE/DE	24 V DC	3-pin	LED	2.5	**30931**	**KMC-1-24DC-2.5-LED**
					5	**30933**	**KMC-1-24DC-5-LED**
					10	**193459**	**KMC-1-24-10-LED**
		230 V AC	3-pin	–	2.5	**30932**	**KMC-1-230AC-2.5**
					5	**30934**	**KMC-1-230AC-5**

Ordering data – Illuminating seal MEB-LD/MC-LD

Datasheets ➔ Internet: meb, mc

	Description	Operating voltage range	Part no.	Type
	For plug socket with cable KMEB and plug socket MSSD-EB	12 ... 24 V DC	**151717**	**MEB-LD-12-24DC**
		230 V DC/AC ±10%	**151718**	**MEB-LD-230AC**
	For connecting cable KMC and plug socket MSSD-C	12 ... 24 V DC	**19145**	**MC-LD-12-24DC**
		230 V DC/AC ±10%	**19146**	**MC-LD-230AC**

Ordering data – Locking clip CPV18-HV

Datasheets ➔ Internet: cpv18-hv

	Description		Part no.	Type	PU[1]
	For MS4/6-EE/DE-...-V24	Cover for the manual override, the clip prevents actuation	**530056**	**CPV18-HV**	**10**

[1] Packaging unit

Ordering data –

Datasheets ➔ Internet: spau

	Pneumatic connection	Display type	Switching output	Electrical connection	Part no.	Type
For direct mounting on the adapter with connecting thread 1/8 or 1/4, pressure measuring range 0 ... 10 bar, relative pressure measurement						
	Male thread R1/8	Illuminated LCD	2x PNP or 2x NPN switchable	M8x1, 4-pin	**8001203**	**SPAU-P10R-T-R18M-L-PNLK-PNVBA-M8D**
				M12x1, 4-pin	**8001206**	**SPAU-P10R-T-R18M-L-PNLK-PNVBA-M12D**
	Male thread R1/4			M8x1, 4-pin	**8001209**	**SPAU-P10R-T-R14M-L-PNLK-PNVBA-M8D**
				M12x1, 4-pin	**8001208**	**SPAU-P10R-T-R14M-L-PNLK-PNVBA-M12D**

Accessories

Ordering data – Connecting cable NEBU-M8

Datasheets → Internet: nebu

	Electrical connection	Number of cores	Cable length [m]	Part no.	Type
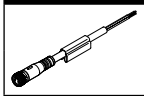	M8x1, straight socket	3	2.5	★ 541333	NEBU-M8G3-K-2.5-LE3
			5	★ 541334	NEBU-M8G3-K-5-LE3
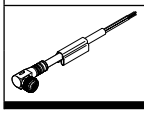	M8x1, angled socket	3	2.5	★ 541338	NEBU-M8W3-K-2.5-LE3
			5	★ 541341	NEBU-M8W3-K-5-LE3

Ordering data – Connecting cable NEBU-M12

Datasheets → Internet: nebu

	Electrical connection	Number of cores	Cable length [m]	Part no.	Type
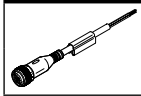	M12x1, straight socket	4	2.5	★ 550326	NEBU-M12G5-K-2.5-LE4
			5	★ 541328	NEBU-M12G5-K-5-LE4
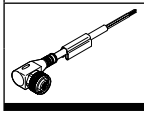	M12x1, angled socket	4	2.5	550325	NEBU-M12W5-K-2.5-LE4
			5	541329	NEBU-M12W5-K-5-LE4

Ordering data – Sensor socket SIE-GD

Datasheets → Internet: sie-gd

	Electrical connection	Part no.	Type
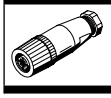	M12x1, 4-pin	18494	SIE-GD

Ordering data – Angled plug socket SIE-WD

Datasheets → Internet: sie-wd

	Electrical connection	Part no.	Type
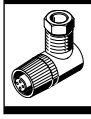	M12x1, 4-pin	12956	SIE-WD-TR

Ordering data – Silencer U

Datasheets → Internet: u

	Description	Pneumatic connection	Part no.	Type
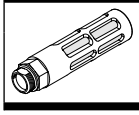	For MS4-EM1/EE	G1/4	6842	U-1/4-B
	For MS6-EM1/EE	G1/2	6844	U-1/2-B
	For MS9/12-EM/EE	G1	151990	U-1-B

Ordering data – Pressure gauge MA

	Nominal size	Pneumatic connection	Display range [bar]	[psi]	Part no.	Type
	Pressure gauge MA, EN 837-1					Datasheets → Internet: ma
	40	R1/4	0 … 16	0 … 232	187080	MA-40-16-R1/4-EN
		G1/4	0 … 16	0 … 232	183901	MA-40-16-G1/4-EN
	Pressure gauge MA, EN 837-1, with red/green range					Datasheets → Internet: ma
	40	R1/8	0 … 16	–	525726	MA-40-16-R1/8-E-RG
	50	R1/4	0 … 16	–	525729	MA-50-16-R1/4-E-RG

Ordering data – Padlock LRVS-D

	Weight [g]	Part no.	Type
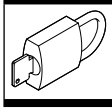	120	193786	LRVS-D