PUT

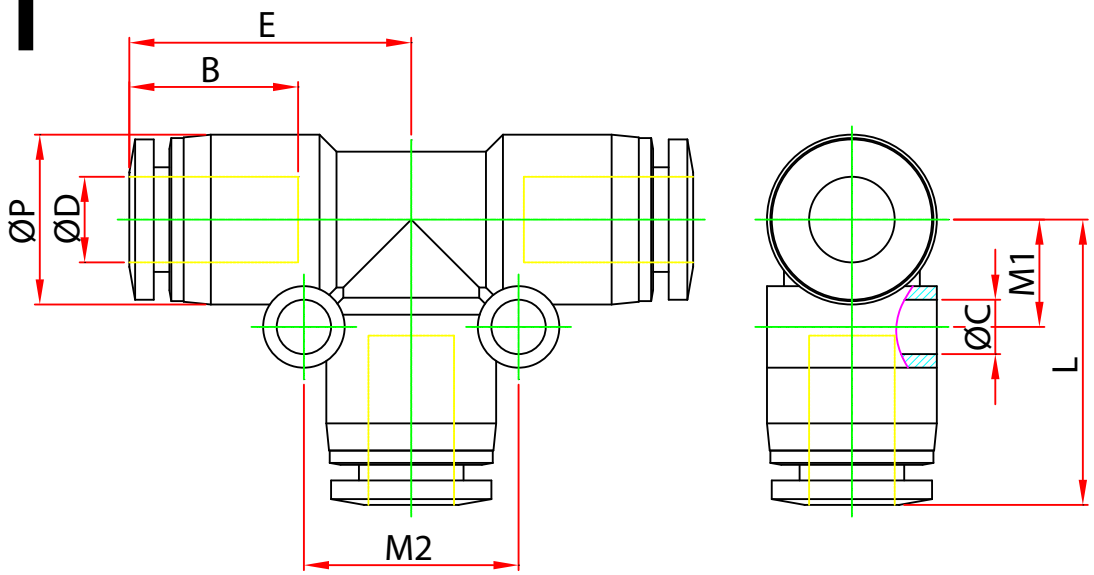

MODEL	ØD	ØP	L	E	ØC	B	M1	M2	ORIFICE	WEIGHT (g)	BOX(EA)
PUT 04	4	10.5	18.7	18.0	3.3	14.8	6.8	12.8	3.4	7.0	100
PUT 06	6	12.5	21.0	20.8	3.3	16.4	7.9	15.8	5.0	10.0	50
PUT 08	8	14.8	23.6	22.6	4.5	18.3	9.7	19.3	6.8	13.0	50
PUT 10	10	17.5	25.5	24.3	4.3	19.7	10.9	21.8	8.0	19.0	25
PUT 12	12	20.5	29.9	28.7	4.3	22.9	12.4	24.6	10.0	29.0	25
PUT 14	14	23.0	31.9	31.9	4.3	23.7	13.7	27.3	12.0	39.0	15
PUT 16	16	25.5	34.3	34.3	5.3	24.1	15.9	31.8	13.0	50.0	15